SYMBOL	MN NO	SHEET NO	ADDRESS	ISSUED	DATE

ISSUED 2018/03/26

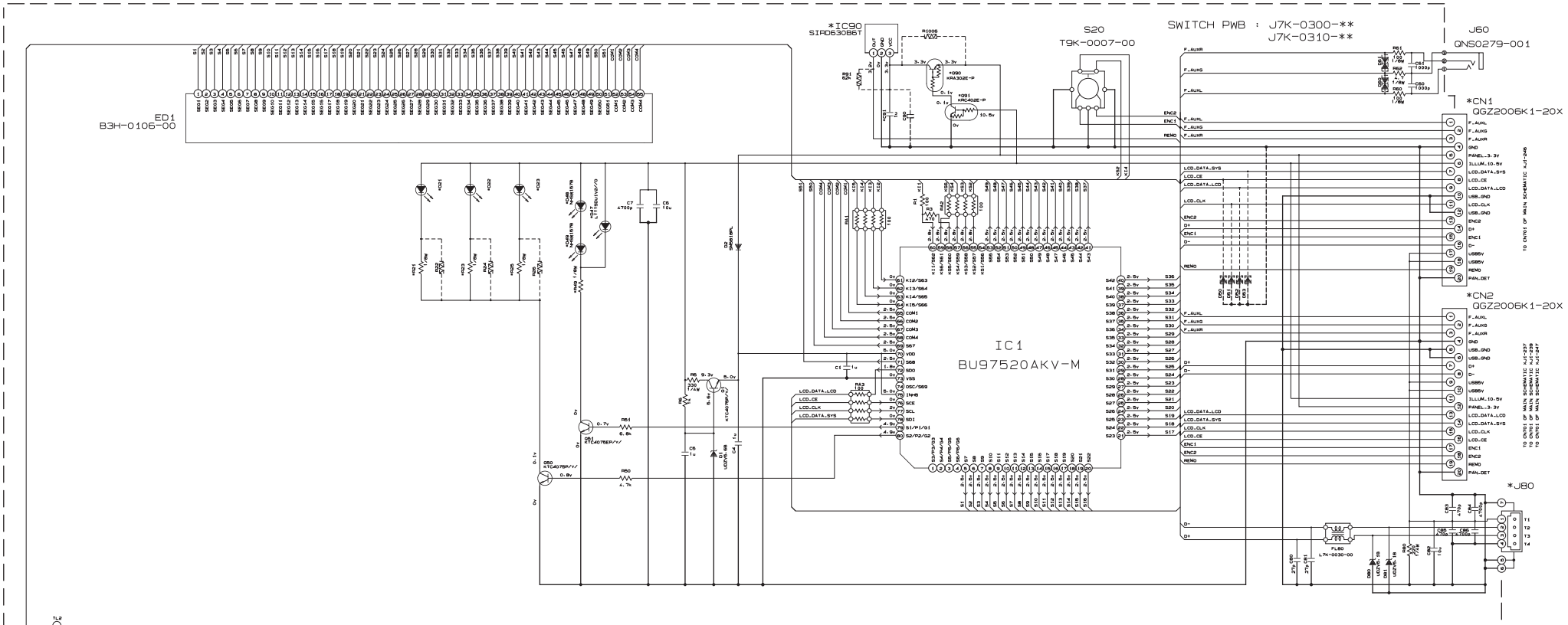

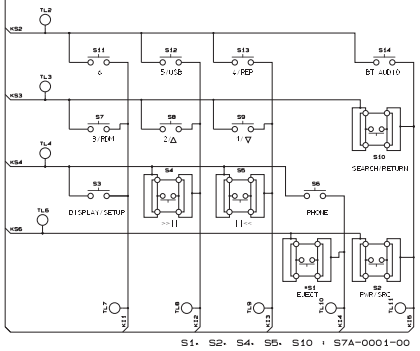

DIFFERENCE TABLE

Symbol Number	E-01 BT RED- W/OUT REMO	E-02 DMR BT RED- W/OUT REMO	E-03 USB RED- W/OUT REMO	KD-X262/X162	-00 BT LUE- WITH REMO	K-01 BT BLUE- W/OUT REMO	K-02 DMR BT RED- WITH REMO	K-03 DMR BT BLUE- W/OUT REMO	KD-X163
C91	-	-	-	-	-	-	-	-	-
CN1	-	-	QGZ2006K1-20X	-	-	-	-	-	-
CN2	QGZ2006K1-20X	QGZ2006K1-20X	-	QGZ2006K1-20X	GZ2006K1-20X	QGZ2006K1-20X	QGZ2006K1-20X	QGZ2006K1-20X	QGZ2006K1-20X
D21	LRT67DU1V211	LRT67DU1V211	LRT67DU1V211	LRT67DU1V211	SMTUB85ZT3Y2	QSMTUB85ZT3Y2	LRT67DU1V211	QSMTUB85ZT3Y2	QSMTUB85ZV7Y2
D22	LRT67DU1V211	LRT67DU1V211	LRT67DU1V211	LRT67DU1V211	SMTUB85ZT3Y2	QSMTUB85ZT3Y2	LRT67DU1V211	QSMTUB85ZT3Y2	QSMTUB85ZV7Y2
D23	LRT67DU1V211	LRT67DU1V211	LRT67DU1V211	LRT67DU1V211	SMTUB85ZT3Y2	QSMTUB85ZT3Y2	LRT67DU1V211	QSMTUB85ZT3Y2	QSMTUB85ZV7Y2
D47	-	-	-	-	-	-	-	-	LTTTSDU1V2//0
D48	N-SW157B	N-SW157B	N-SW157B	N-SW157B	PSW157B	N-SW157B	N-SW157B	N-SW157B	-
D49	N-SW157B	N-SW157B	N-SW157B	N-SW157B	PSW157B	N-SW157B	N-SW157B	N-SW157B	-
IC90	-	-	-	-	IRD630B6T	-	SIRD630B6T	-	-
J80	E5J-0185-00	E5J-0185-00	E5J-0069-00	E5J-0069-00	5J-0185-00	E5J-0185-00	E5J-0185-00	E5J-0185-00	E5J-0069-00
Q90	-	-	-	-	RA302E-P	-	KRA302E-P	-	-
Q91	-	-	-	-	RC402E-P	-	KRC402E-P	-	-
R21	RK73FB2B821J	RK73FB2B821J	RK73FB2B821J	RK73FB2B821J	K73FB2B561J	RK73FB2B561J	RK73FB2B821J	RK73FB2B561J	RK73FB2B182J
R23	RK73FB2B821J	RK73FB2B821J	RK73FB2B821J	RK73FB2B821J	K73FB2B561J	RK73FB2B561J	RK73FB2B821J	RK73FB2B561J	RK73FB2B182J
R25	RK73FB2B821J	RK73FB2B821J	RK73FB2B821J	RK73FB2B821J	K73FB2B561J	RK73FB2B561J	RK73FB2B821J	RK73FB2B561J	RK73FB2B182J
R49	RK73FB2B331J	RK73FB2B331J	RK73FB2B331J	RK73FB2B331J	K73FB2B331J	RK73FB2B331J	RK73FB2B331J	RK73FB2B331J	RK73FB2B471J
S1	S7A-0001-00	-	S7A-0001-00	-	7A-0001-00	S7A-0001-00	-	-	-
PWB NO.	J7K-0300-**	J7K-0300-**	J7K-0310-**	J7K-0300-**	7K-0300-**	J7K-0300-**	J7K-0300-**	J7K-0300-**	J7K-0300-**

Panel PWB

Applicable model
KD-X163
KD-X162

MODEL NAME : REF TO MODEL LIST

CAUTION:
FOR CONTINUED SAFETY REPLACE SAFETY CRITICAL COMPONENTS ONLY WITH MANUFACTURER'S RECOMMENDED PARTS INDICATES SAFETY CRITICAL COMPONENTS.
⚠ TO REDUCE RISK OF ELECTRIC SHOCK, LEAKAGE CURRENT APPLIANCE IS RETURNED TO THE CUSTOMER.
(EXPOSED PARTS ARE ACCEPTABLY INSULATED FROM SUPPLY CIRCUIT)

JVC **KD-X262 etc.**

JVC KENWOOD Corporation