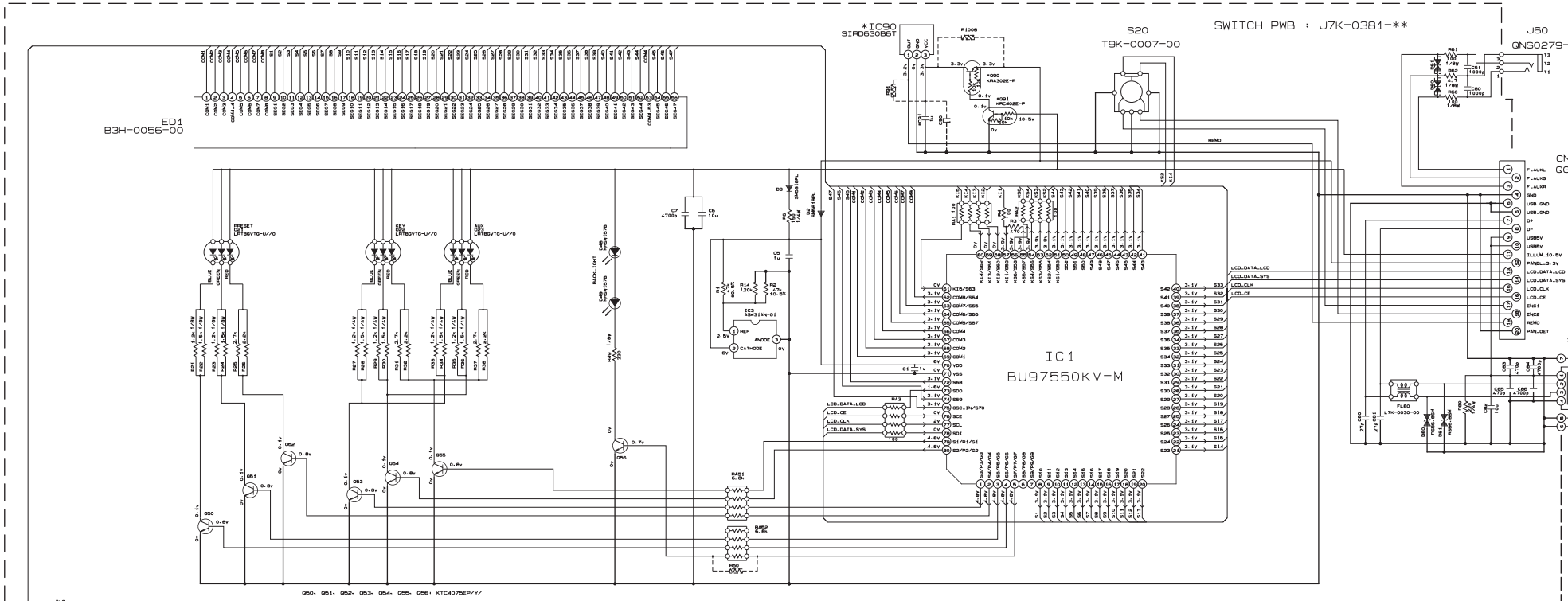


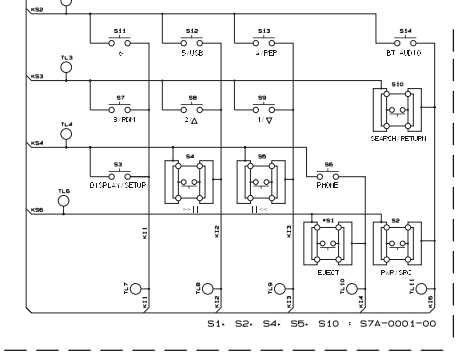


DIFFERENCE TABLE

| Symbol Number | E-01 DAB, W/OUT REMO | K-00 BT, WITH REMO | K-01 DMR BT, WITH REMO | KD-X165 |
|---|---|---|---|---|
| C91 | - | CK73GXR1A105K | CK73GXR1A105K | - |
| IC90 | - | SIRD630B6T | SIRD630B6T | - |
| Q90 | - | KRA302E-P | KRA302E-P | - |
| Q91 | - | KRC402E-P | KRC402E-P | - |
| S1 | S7A-0001-00 | S7A-0001-00 | - | - |
| J80 | E5J-0185-00 | E5J-0185-00 | E5J-0185-00 | E5J-0069-00 |

# Panel PWB

MODEL NAME : REF TO MODEL LIST

**CAUTION:**
FOR CONTINUED SAFETY REPLACE SAFETY CRITICAL COMPONENTS ONLY WITH MANUFACTURER'S RECOMMENDED PARTS (INDICATES SAFETY CRITICAL COMPONENTS.
⚠ TO REDUCE RISK OF ELECTRIC SHOCK, LEAKAGE CURRENT APPLIANCE IS RETURNED TO THE CUSTOMER.
(EXPOSED PARTS ARE ACCEPTABLY INSULATED FROM SUPPLY CIRCUIT)

JVC
**KD-X165**
JVC KENWOOD Corporation