CONFIDENTIAL

SYMBOL	MN NO	SHEET NO	ADDRESS	ISSUED	
▲ 1	DK019984	1/2 2/2	KN KDC-230UI(K) MODEL DROP Update Model List LA - Update Difference table LD - Update LCD table	CLIFFORD	15 MAY 2018
	2D43331L	1/2 2/2	KN - ADD VARIATION FOR R33,R34 AND R35 LD - Added variation FOR R33,R34 AND R35 IN DIFFERENCE TABLE	CLIFFORD	15 MAY 2018

ISSUED 2018/05/22

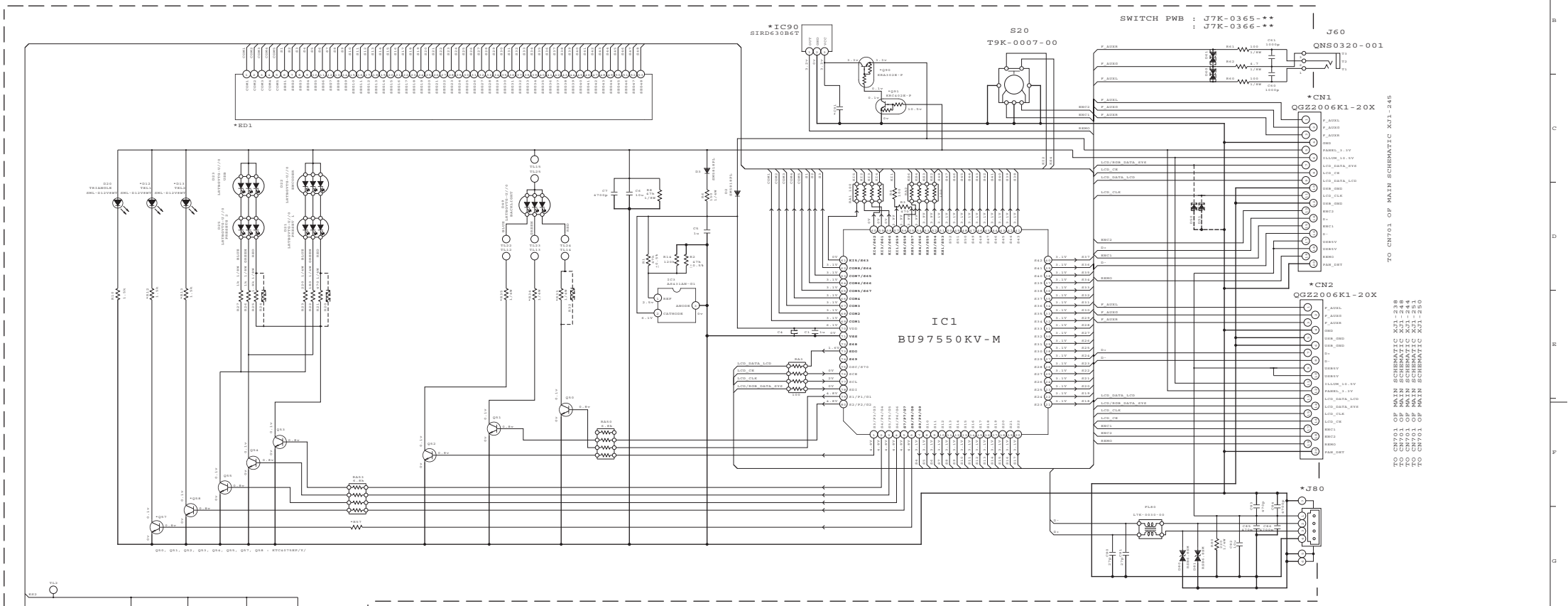

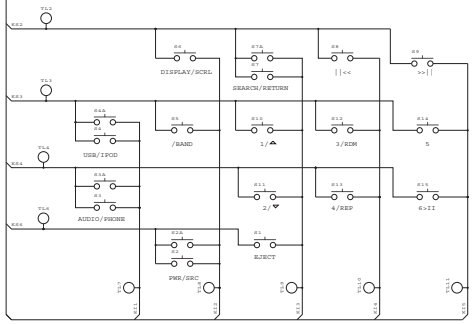

	PCB NO.	J7K-0365-**	KMM-125	J7K-0366-**	J7K-0366-**	J7K-0366-**
	XJ6-134 Symbol Number	M-01 USB|REMO		C-00 BT|REMO	K-01 BT|NO REMO	E-01 BT|NO REMO
	C91	CK73GXR1A105K	-	CK73GXR1A105K	-	-
	CN1	QGZ2006K1-20X	-		-	-
	CN2	-	QGZ2006K1-20X	QGZ2006K1-20X	QGZ2006K1-20X	QGZ2006K1-20X
	D12	-	-	SML-D12V8WT	SML-D12V8WT	SML-D12V8WT
	D13	-	-	SML-D12V8WT	SML-D12V8WT	SML-D12V8WT
	IC90	SIRD630B6T	-	SIRD630B6T	-	-
	J80	E5J-0069-00	E5J-0069-00	E5J-0185-00	E5J-0185-00	E5J-0185-00
	Q57	-	-	KTC4075EP/Y/	KTC4075EP/Y/	KTC4075EP/Y/
	Q58	-	-	KTC4075EP/Y/	KTC4075EP/Y/	KTC4075EP/Y/
	Q90	KRA302E-P	-	KRA302E-P	-	-
	Q91	KRC402E-P	-	KRC402E-P	-	-
	R12	-	-	RK73GB2A152J	RK73GB2A152J	RK73GB2A152J
	R13	-	-	RK73GB2A152J	RK73GB2A152J	RK73GB2A152J
▲	R33	RK73EB2E681J	RK73EB2E681J	RK73EB2E681J	RK73EB2E561J	RK73EB2E681J
▲	R34	RK73EB2E561J	RK73EB2E561J	RK73EB2E561J	RK73EB2E471J	RK73EB2E561J
▲	R35	RK73EB2E561J	RK73EB2E561J	RK73EB2E561J	RK73EB2E471J	RK73EB2E561J
	R57	-	-	RK73GB2A682J	RK73GB2A682J	RK73GB2A682J

Panel PWB

MODEL NAME : REF TO MODEL LIST

CAUTION:
FOR CONTINUED SAFETY REPLACE SAFETY CRITICAL COMPONENTS ONLY WITH MANUFACTURER'S RECOMMENDED PARTS INDICATES SAFETY CRITICAL COMPONENTS.
⚠ TO REDUCE RISK OF ELECTRIC SHOCK, LEAKAGE CURRENT APPLIANCE IS RETURNED TO THE CUSTOMER.
(EXPOSED PARTS ARE ACCEPTABLY INSULATED FROM SUPPLY CIRCUIT)

KENWOOD
KMM-125
JVC KENWOOD Corporation