REVISIONS

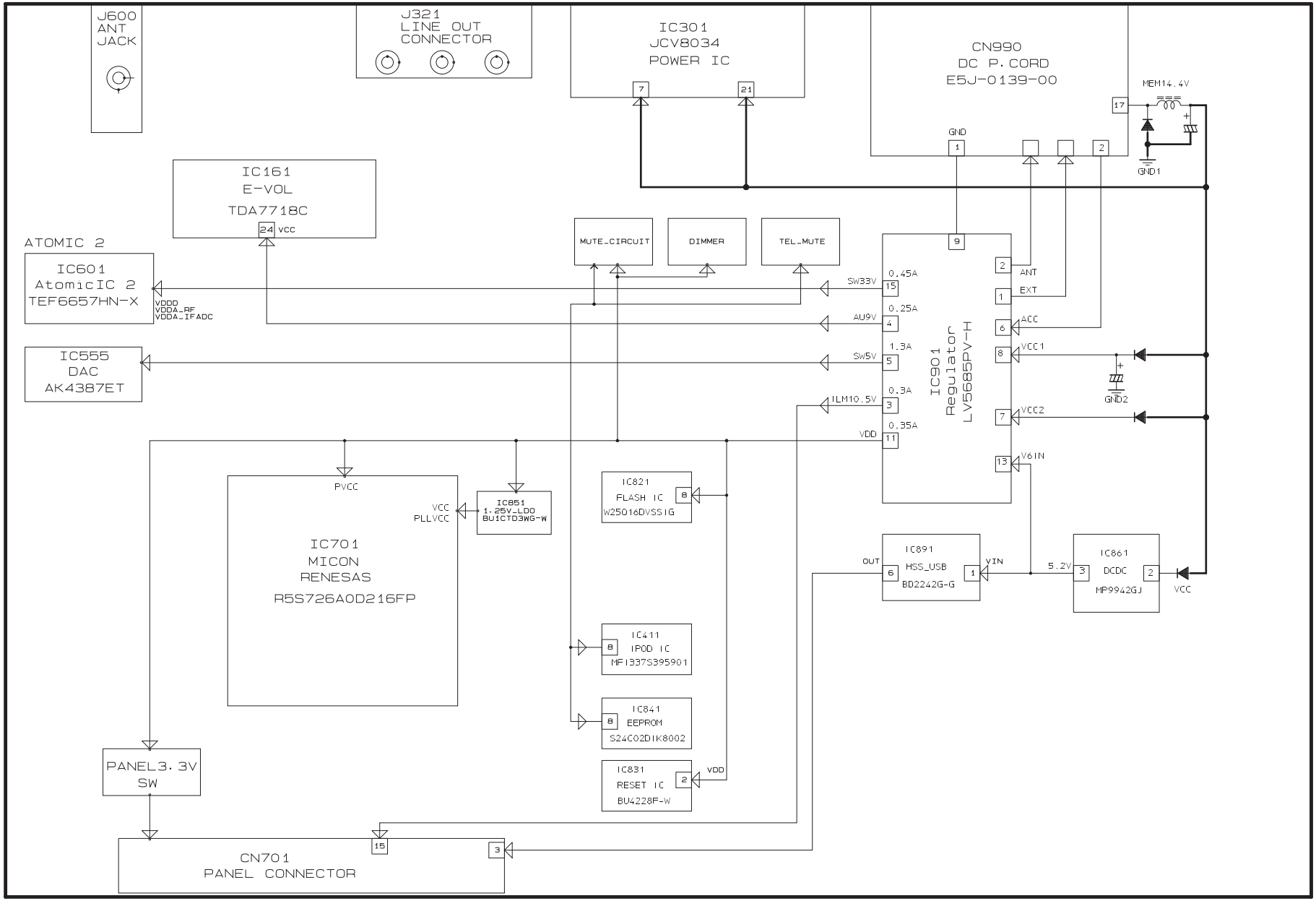

JVC

JVCKENWOOD Corporation (1/2)

KD-X161/KD-X162/KD-X262/KD-X163/KD-X165/KD-X168M

KENWOOD

KMM-125/KMM-105GY/KMM-205/KMM-105AY/KMM-105RY/KMM-105M

17/07/10 03:38:49
BLOCK_R2.cir/001.sht

REVISIONS

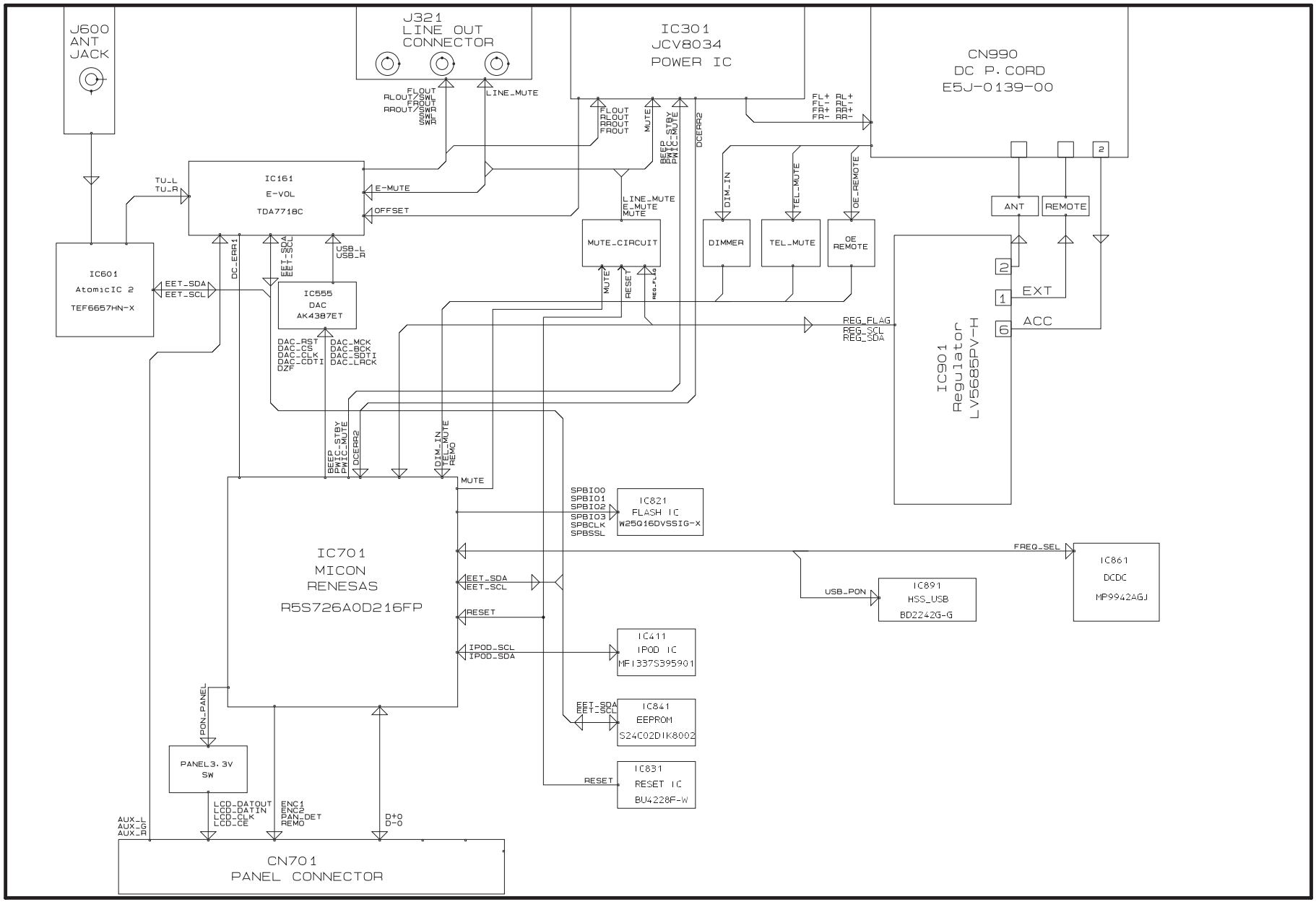

JVC

JVCKENWOOD Corporation

(2/2)

KD-X161/KD-X162/KD-X262/KD-X163/KD-X165/KD-X168M

KENWOOD

KMM-125/KMM-105GY/KMM-205/KMM-105AY/KMM-105RY/KMM-105M

17/07/10 03:38:50
BLOCK_R2.cir/002.sht