RADIO TEST REPORT

Test Report No.: 13946443S-E

Applicant	:	**JVCKENWOOD Corporation**
Type of EUT	:	**GPS NAVIGATION SYSTEM**
Model Number of EUT	:	**DNX5190DABS**
Test standard	:	**ETSI EN 303 345-1 V1.1.1** **ETSI EN 303 345-2 V1.1.1** **ETSI EN 303 345-3 V1.1.1** **ETSI EN 303 345-4 V1.1.1**
Test item	:	**Sensitivity** **Adjacent channel selectivity and blocking**
Test Result	:	**Complied (Refer to Section 3)**

1. This test report shall not be reproduced in full or partial, without the written approval of UL Japan, Inc.
2. The results in this report apply only to the sample tested.
3. This sample tested is in compliance with the limits of the above standard.
4. The test results in this test report are traceable to the national or international standards.
5. This test report covers EMC technical requirements. It does not cover administrative issues such as Manual or non-EMC test related Requirements. (if applicable)
6. The all test items in this test report are conducted by UL Japan, Inc. Shonan EMC Lab.
7. The opinions and the interpretations to the result of the description in this report are outside scopes where UL Japan has been accredited.

Date of test:

August 11, 2021

Representative test engineer:

Akihiro Oda
Engineer

Approved by:

Akira Sato
Engineer

Testing LAB
RTL02610

☐ The testing in which "Non-accreditation" is displayed is outside the accreditation scopes in UL Japan.
☒ There is no testing item of "Non-accreditation".

UL Japan, Inc.
Shonan EMC Lab., Consumer, Medical & Information Technologies Division
1-22-3 Megumigaoka, Hiratsuka-shi, Kanagawa-ken, 259-1220 JAPAN
Telephone: +81 463 50 6400
Facsimile: +81 463 50 6401

REVISION HISTORY

Original Test Report No.: 13946443S-E

Revision	Test report No.	Date	Page revised	Contents
- (Original)	13946443S-E	September 3, 2021	-	-

Reference: Abbreviations (Including words undescribed in this report)

A2LA	The American Association for Laboratory Accreditation
AC	Alternating Current
AFH	Adaptive Frequency Hopping
AM	Amplitude Modulation
Amp, AMP	Amplifier
ANSI	American National Standards Institute
Ant, ANT	Antenna
AP	Access Point
Atten., ATT	Attenuator
AV	Average
BPSK	Binary Phase-Shift Keying
BR	Bluetooth Basic Rate
BT	Bluetooth
BT LE	Bluetooth Low Energy
BW	BandWidth
Cal Int	Calibration Interval
CCK	Complementary Code Keying
Ch., CH	Channel
CISPR	Comite International Special des Perturbations Radioelectriques
CW	Continuous Wave
DBPSK	Differential BPSK
DC	Direct Current
DFS	Dynamic Frequency Selection
DQPSK	Differential QPSK
DSSS	Direct Sequence Spread Spectrum
EDR	Enhanced Data Rate
EIRP, e.i.r.p.	Equivalent Isotropically Radiated Power
EMC	ElectroMagnetic Compatibility
EMI	ElectroMagnetic Interference
EN	European Norm
ERP, e.r.p.	Effective Radiated Power
EU	European Union
EUT	Equipment Under Test
Fac.	Factor
FCC	Federal Communications Commission
FHSS	Frequency Hopping Spread Spectrum
FM	Frequency Modulation
Freq.	Frequency
GFSK	Gaussian Frequency-Shift Keying
GNSS	Global Navigation Satellite System
GPS	Global Positioning System
Hori.	Horizontal
IEC	International Electrotechnical Commission
IEEE	Institute of Electrical and Electronics Engineers
IF	Intermediate Frequency
ILAC	International Laboratory Accreditation Conference
ISED	Innovation, Science and Economic Development Canada
ISO	International Organization for Standardization
JAB	Japan Accreditation Board
LAN	Local Area Network
LIMS	Laboratory Information Management System
MCS	Modulation and Coding Scheme
MRA	Mutual Recognition Arrangement
NIST	National Institute of Standards and Technology
NS	No signal detect.
NSA	Normalized Site Attenuation
NVLAP	National Voluntary Laboratory Accreditation Program
OBW	Occupied Band Width
OFDM	Orthogonal Frequency Division Multiplexing
P/M	Power meter
PCB	Printed Circuit Board
PER	Packet Error Rate
PHY	Physical Layer
PK	Peak
PN	Pseudo random Noise
PRBS	Pseudo-Random Bit Sequence
PSD	Power Spectral Density
QAM	Quadrature Amplitude Modulation
QP	Quasi-Peak
QPSK	Quadri-Phase Shift Keying
RBW	Resolution Band Width
RDS	Radio Data System
RE	Radio Equipment
RF	Radio Frequency
RMS	Root Mean Square
Rx	Receiving
SA, S/A	Spectrum Analyzer
SG	Signal Generator
SVSWR	Site-Voltage Standing Wave Ratio
TR	Test Receiver
Tx	Transmitting
VBW	Video BandWidth
Vert.	Vertical
WLAN	Wireless LAN

CONTENTS

PAGE

Section 1: Customer information **5**
Section 2: Equipment under test (E.U.T.) **5**
Section 3: Test specification, procedures and results **6**
Section 4: Operation of E.U.T. during testing **9**
Section 5: Sensitivity **11**
Section 6: Adjacent channel selectivity and blocking **13**
Appendix 1: Photographs of test setup **16**
Appendix 2: Data of Radio test **17**
EN 303 345
Sensitivity
Adjacent channel selectivity and blocking

Appendix 3: Test instruments **20**

Section 1: Customer information

Company Name	:	JVCKENWOOD Corporation
Address	:	2967-3 Ishikawa-machi, Hachioji-shi, Tokyo, 192-8525 Japan
Telephone Number	:	+81-42-646-5525
Facsimile Number	:	+81-42-646-1440
Contact Person	:	Seigo Tsutsumi

The information provided from the customer is as follows:
- Applicant, Type of Equipment, Model No. on the cover page and other relevant pages
- Operating/Test Mode(s) (Mode(s)) on all the relevant pages
- Section 1: Customer information
- Section 2: Equipment under test (E.U.T.) other than receipt date of sample
- Section 4: Operation of E.U.T. during testing

* The laboratory is exempted from liability of any test results affected from the information in Section 2 and 4.

Section 2: Equipment under test (E.U.T.)

2. 1 Identification of E.U.T.

Type of Equipment	:	GPS NAVIGATION SYSTEM
Model No.	:	DNX5190DABS
Serial No.	:	Refer to SECTION 4.2
Rating	:	DC 12 V
Receipt Date of Sample	:	August 11, 2021
Country of Mass-production	:	Indonesia
Condition of EUT	:	Production prototype (Not for Sale: This sample is equivalent to mass-produced items.)
Modification of EUT	:	No Modification by the test lab.
Size	:	178 x 155 x 100 (Width x Depth x Height (mm))

2. 2 Product description

Model: DNX5190DABS (referred to as the EUT in this report) is a GPS NAVIGATION SYSTEM.

Similar model:

Model No	Difference
DNX5190DABS *	Base model
DNX7190DABS	Slide Panel
DDX819WBTS	None Navigation function, Wide Panel
DMX8019S	None Navigation function, None DVD function

* Tested model

Genreral Specification

Clock frequency(ies) in the system: 6.2208 GHz (Maximum)

Radio Specification

Type of radio	FM	AM	DAB	DRM
Equipment Type	Receiver			
Frequency of Operation	87.5 MHz - 108.0 MHz	LW:153 kHz - 279 kHz, MW:531 kHz - 1611 kHz	Band III: 174.928 MHz - 239.200 MHz	-
Type of Modulation	FM	AM	OFDM	-
Antenna Connector Type	JASO (External)	JASO (External)	SMB type (External)	-
Impedance	75 ohm	75 ohm	50 ohm	-
Reception method	Conducted	Conducted	Conducted	-

Section 3: Test specification, procedures and results

3. 1 Test specification

Title : ETSI EN 303 345-1 V1.1.1
ETSI EN 303 345-2 V1.1.1
ETSI EN 303 345-3 V1.1.1
ETSI EN 303 345-4 V1.1.1

Part 1 : Broadcast Sound Receivers;
Part 1: Generic requirements and measuring methods

Part 2 : Broadcast Sound Receivers;
Part 2: AM broadcast sound service;
Harmonised Standard for access to radio spectrum

Part 3 : Broadcast Sound Receivers;
Part 3: FM broadcast sound service;
Harmonised Standard for access to radio spectrum

Part 4 : Broadcast Sound Receivers;
Part 4: DAB broadcast sound service;
Harmonised Standard for access to radio spectrum

13946443S-E (this report) is for updating the test standards below.
We have verified the difference between previous versions and updated versions of each standard.
It is judged that the EUT complies with the updated standards with some additional tests.
Therefore this report only includes the requirements newly introduced in ETSI EN 303 345-3 V1.1.1 (See clause 3.2).

Previous Standards	Updated Standards
Draft EN 303 345 V1.1.1 Final draft EN 303 345 V1.1.7	ETSI EN 303 345-1 V1.1.1 ETSI EN 303 345-2 V1.1.1 ETSI EN 303 345-3 V1.1.1 ETSI EN 303 345-4 V1.1.1

Test reports: 12688559Y-A (previous report number) and 13946443S-E include information of all the requirements in ETSI EN 303 345-1 V1.1.1, ETSI EN 303 345-2 V1.1.1, ETSI EN 303 345-3 V1.1.1, ETSI EN 303 345-4 V1.1.1.
*For original test report(s) referred in this report, the latest version (including any revisions) is always referred.

3. 2 Procedures & results

ETSI EN 303 345-3 V1.1.1 (FM)

Item	Test Procedure	Limits	Criteria	Worst Point	Results	Remarks
Sensitivity	ETSI EN 303 345-1 ETSI EN 303 345-3	ETSI EN 303 345-3 Clause 4.2.2	SNR ≥40 dBQ	SNR 47.2 dBQ	Complied a)	-
Adjacent Channel Selectivity	ETSI EN 303 345-1 ETSI EN 303 345-3	ETSI EN 303 345-3 Clause 4.3.2	SNR ≥40 dBQ	SNR 49.7 dBQ (N=+3, N=-3)	Complied b)	-
Blocking	ETSI EN 303 345-1 ETSI EN 303 345-3	ETSI EN 303 345-3 Clause 4.3.2	SNR ≥40 dBQ	SNR 49.8 dBQ	Complied c)	-

a) Refer to Appendix 2 (data of Sensitivity)
b) Refer to Appendix 2 (data of Adjacent Channel Selectivity)
c) Refer to Appendix 2 (data of Blocking)
Note : UL Japan's WORK PROCEDURE for AUDIO VISUAL EQUIPMENT No. 13-EM-W0414

3. 3 Uncertainty

There is no applicable rule of uncertainty in this applied standard. Therefore, the results are derived depending on whether or not laboratory uncertainty is applied.

Although this standard determines only the limit value of uncertainty, there is no applicable rule of uncertainty in this. Therefore, the results are derived depending on whether or not laboratory uncertainty is applied.
The following uncertainties have been calculated to provide a confidence level of 95 % using a coverage factor $k = 2$.

Conducted measurements	(±)
Sensitivity	0.9 dB
Adjacent channel selectivity and blocking	0.9 dB

3. 4 Addition to standard

No addition, deviation nor exclusion has been made from standards.

3. 5 Test signal configurations

ETSI EN 303 345-3 Test signal configuration

Parameter	**FM**		**AM**
	Wanted	**Unwanted**	**Blocking**
Audio modulation	1 kHz tone	Weighted noise Recommendation ITU-R BS.559-2 clause 1, band- limited to 15 kHz (see note 1)	1 kHz tone
Other modulation parameters	±60.8 kHz peak deviation	15.9 kHz RMS deviation (see note 2)	80 % depth
Pilot tone	None	None	-

NOTE 1: The filter shall have a cut-off frequency of 15 kHz and a minimum roll-off of 60 dB/octave.
NOTE 2: This is equivalent to a quasi-peak deviation of 34.8 kHz and has pre-emphasis enabled. The quasi-peak level measurement is defined by Recommendation ITU-R BS.641, clause 5; with pre-emphasis disabled the quasi-peak deviation is 32 kHz (14.5 kHz RMS).

3. 6 Performance criteria

Audio quality/Impairment criteria

ETSI EN 303 345-3 (FM)	SNR ≥ 40 dBQ ref ±60.8 kHz deviation; clean audio (see note 1)
NOTE 1: Clean audio is defined as 10 seconds of audio with no subjective impairments (e.g. clicks resulting from FM threshold effects). NOTE 2: Clean audio is defined as 10 seconds of audio with no subjective impairments (e.g. muting, clicks, warbles or squeaks). *The evaluation of audio quality was confirmed by the observation of engineer.	

3. 7 Confirmation

UL Japan, Inc. hereby confirms that EUT , in the configuration tested, complies with the specifications ETSI EN 303 345-1 V1.1.1, ETSI EN 303 345-2 V1.1.1., ETSI EN 303 345-3 V1.1.1. and ETSI EN 303 345-4 V1.1.1.

3. 8 Test Location

UL Japan, Inc. Shonan EMC Lab.
1-22-3 Megumigaoka, Hiratsuka-shi, Kanagawa-ken 259-1220 JAPAN
Telephone number : +81 463 50 6400
Facsimile number : +81 463 50 6401
JAB Accreditation No. : RTL02610

Test room	Width x Depth x Height (m)	Test room	Width x Depth x Height (m)
No.1 Semi-anechoic chamber	20.6 x 11.3 x 7.65 Maximum measurement distance: 10 m	No.1 shielded room	6.8 x 4.1 x 2.7
No.2 Semi-anechoic chamber	20.6 x 11.3 x 7.65 Maximum measurement distance: 10 m	No.2 shielded room	6.8 x 4.1 x 2.7
No.3 Semi-anechoic chamber	12.7 x 7.7 x 5.35 Maximum measurement distance: 5 m	No.3 shielded room	6.3 x 4.7 x 2.7
No.4 Semi-anechoic chamber	8.1 x 5.1 x 3.55	No.4 shielded room	4.4 x 4.7 x 2.7
		No.5 shielded room	7.8 x 6.4 x 2.7
		No.6 shielded room	7.8 x 6.4 x 2.7
		No.8 shielded room	3.45 x 5.5 x 2.4

3. 9 Test setup, Data of Radio & Test instruments

Refer to Appendix 1 to 3.

Section 4: Operation of E.U.T. during testing

4. 1 Operating modes

The EUT exercise program used during testing was designed to exercise the various system components in a manner similar to typical use.

Test sequence is used : FM Reception_98 MHz

Firmware : SoC: 0.0.3209.4000
Syscom: 1.0.0209.3100
Panel: 1.0.0159.3700

Justification: The system was configured in typical fashion (as a customer would normally use it) for testing.

4. 2 Configuration and peripherals

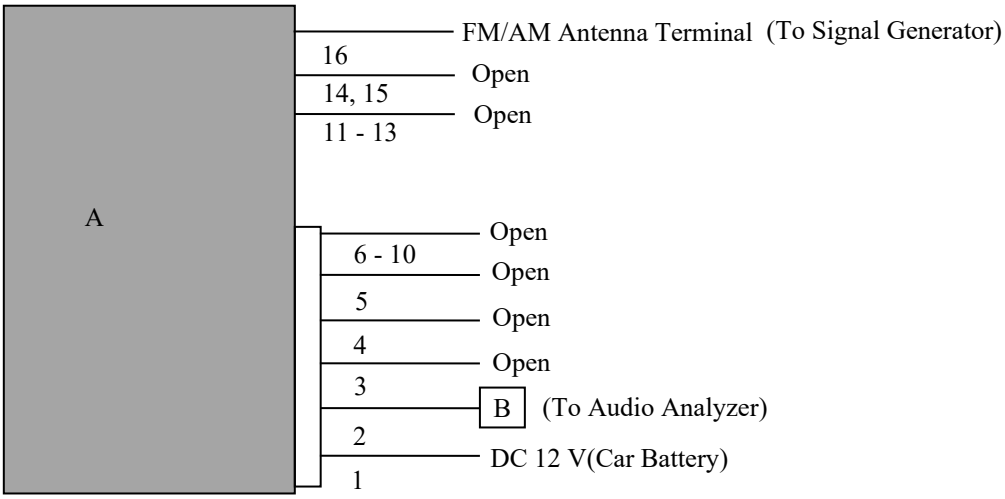

* Cabling and setup were taken into consideration and test data was taken under worse case conditions

Description of EUT and support equipment

No.	Item	Model number	Serial number	Manufacturer	Remark
A	GPS NAVIGATION SYSTEM	DNX5190DABS	PE-X0002	JVCKENWOOD Corporation	EUT
B	Dummy Load	-	-	-	4 ohm

List of cables used

No.	Name	Length (m)	Shield	Remark
1	DC	0.8+1.0	Unshielded	-
2	Speaker	0.6	Unshielded	-
3	Speaker	0.6	Unshielded	-
4	Speaker	0.1	Unshielded	-
5	Speaker	0.1	Unshielded	-
6	ILLUMINATION	0.1	Unshielded	-
7	STEERING WHEEL REMOTE	0.1	Unshielded	-
8	CAM	0.1	Unshielded	-
9	P.CONT	0.1	Unshielded	-
10	ANT CONT	0.1	Unshielded	-
11	REAR VIEW CAMERA	0.2	Shielded	-
12	VIDEO OUT	0.2	Shielded	-
13	FRONT VIEW CAMERA	0.2	Shielded	-
14	USB	0.2	Shielded	-
15	USB	0.2	Shielded	-
16	FM/AM Antenna	0.15	Shielded	-

Radio Antenna

Modulation	Antenna type	Impedance	Reception method	Frequency Bands	Remarks
FM	External	75 ohm	Conducted	VHF Band II	-

*The classification of antenna type is as follows.

External : antenna designed to be connected to the equipment with the use of a 50 ohm or 75 ohm external connector.

Integral : antenna which is detachable from the equipment without the use of any tools, and not using a 50 ohm or 75 ohm external connector

Built-in : antenna that cannot be detached from the equipment.

Section 5: Sensitivity

5. 1 Operating environment

Test place : See data
Temperature : See data
Humidity : See data
Atmosphere : See data

5. 2 Test configuration

The EUT was placed on a non-metallic table height of 0.8 m.
Photographs of the set up are shown in Appendix 1.

5. 3 Test conditions

EUT position : Table top

Test system
External antenna / Electric (Audio signal voltage level measurement)

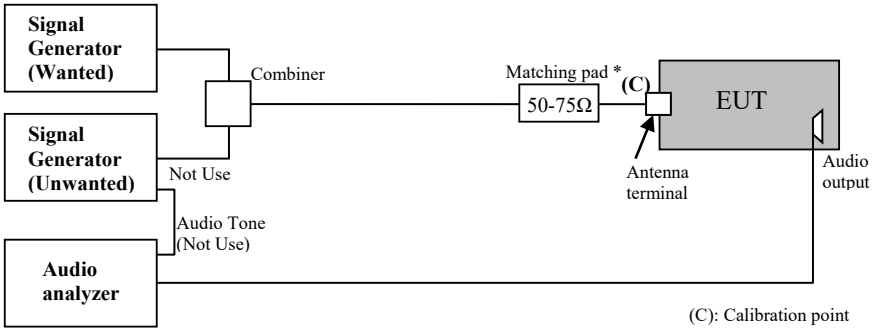

* Used for FM reception mode

Table 1: Sensitivity requirements (ETSI EN 303 345-3)

De-modulation	Tuned frequency band	Wanted signal centre frequency (MHz)	Required sensitivity limit	
			Conducted (dBm)	Radiated (dBμV/m)
FM	VHF band II	98	-90	50 (see note)
NOTE: For products with an integral antenna, the requirement is relaxed to 67 dBμV/m.				

If the FM tuner port has two systems, "Main" and "Sub", in the test item where the input signal level to EUT is specified, when the "Sub" tuner port cannot receive at the specified input signal level, tests related to the "Sub" tuner port may not be possible.

5. 4 Test procedure

FM sensitivity measurements
The ‘unwanted’ signal generator remains switched off for the duration of the test.
The wanted signal generator is set to the required modulation method and test configuration as specified in section 3.5, and to the frequency specified in table 1 (FM). The signal level is adjusted with the modulation disabled to the required sensitivity level in the table 1 (FM) plus 6 dB, as measured at (C).
The modulation is enabled.
The receiver is tuned to the frequency of the 'wanted' signal generator. The receiver shall be tuned for optimum THD+N (i.e. as it would be tuned by a user for best quality). The receiver's audio level shall be set so as to provide clean 1 kHz audio tone at the audio output (minimum distortion, that is typically less than 3 % total harmonic distortion, but no more than 10 % total harmonic distortion) but of sufficient level to drive the measurement device.
The level of the 'wanted' signal generator is reduced by 6 dB.
The audio output, measured using the measurement device, is recorded as the signal level, S.
The modulating audio signal for the ‘wanted’ signal generator is removed. The audio output, measured using the measurement device, is recorded as the noise level, N.
SNR was calculated by following formula.

SNR = S - N (dBQ)

The impairment criteria given in section 3.6 are met then the EUT has passed the test.

The sensitivity test was made with the following detector function of the test audio analyzer.

ETSI EN 303 345-1

Modulation method	Measurement device on audio output
Analogue (FM)	Quasi-peak detector employing Recommendation ITU-R BS.468-4, clause 1

5. 5 Results

Summary of the test results : Pass

Section 6: Adjacent channel selectivity and blocking

6. 1 Operating environment

Test place : See data
Temperature : See data
Humidity : See data
Atmosphere : See data

6. 2 Test configuration

The EUT was placed on a non-metallic table height of 0.8 m.
Photographs of the set up are shown in Appendix 1.

6. 3 Test conditions

EUT position : Table top

Test system
External Antenna/ Electric(Audio signal voltage level measurement)

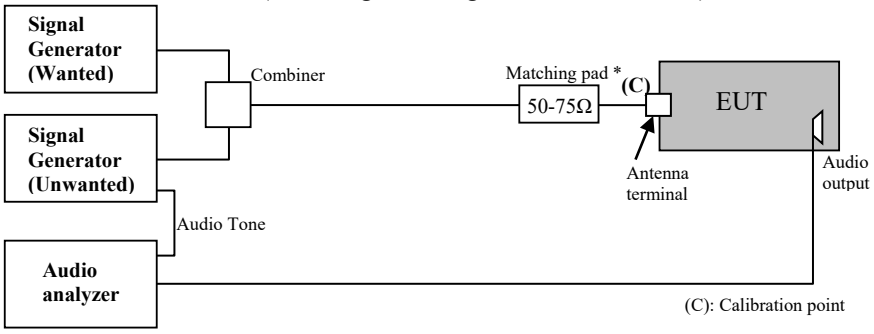

* Used for FM reception mode

Limit table

Table 2: Adjacent channel selectivity and blocking requirements (ETSI EN 303 345-3)

Demodulation (see note 1)	Tuned frequency band	C Wanted signal centre frequency (MHz)	C Wanted signal level		Required I/C ratio (see notes 2 and 3)			
			Conducted (dBm)	Radiated (dBμV/m)	N = 2 (dB)	N = 3 (dB)	N = 4 (dB)	Blocking (dB)
FM (built-in or integral antenna)	VHF band II	98	n/a	51	-15	-3	8	20
FM (external antenna)	VHF band II	98	-84	n/a	3	17	30	30

NOTE 1: The ACS and blocking requirements are currently separated into different limits for radiated and conducted testingmethods. These limits are likely to be unified in a future revision of the present document. Users of the present document should consult frequently the latest list published in the Official Journal of the European Union.
NOTE 2: The frequency of the interferer shall be calculated using the channel spacing data in table 7 for each of the 6 defined adjacent channels N = {-4, -3, -2, +2, +3, +4} and the two blocking offsets. Each row of table 6 thus defines 8 individual tests.
NOTE 3 : The minimum level of I for the relevant level of impairment is calculated by adding the I/C ratio to the wanted C level.
NOTE 4: The wanted signal level for receivers with integral antenna is 73 dBμV/m.

Table 3: Channel spacing for adjacent channel selectivity and blocking (ETSI EN 303 345-3)

Demodulation	Tuned frequency band	Unwanted frequency (N = 2, 3, 4)	Unwanted frequency (blocking)
FM	VHF band II	±N × 100 kHz	±800 kHz

If the FM tuner port has two systems, "Main" and "Sub", in the test item where the input signal level to EUT is specified, when the "Sub" tuner port cannot receive at the specified input signal level, tests related to the "Sub" tuner port may not be possible.

6. 4 Test procedure

FM adjacent channel selectivity and blocking measurements
The ‘wanted’ signal generator is set to the required modulation method, test signal configuration in section 3.5, and to the frequency specified in table 2 (FM). The signal level is adjusted with the modulation diabled to the specified wanted signal level in table 2 (FM), assumed at (C), with the 'unwanted' generator switched off.
The ‘unwanted’ signal generator is set to the required modulation method, test signal configuration in section 3.5, and centre frequency calculated from the wanted signal centre frequency and the required frequency offset in table 3 (FM). The signal level is adjusted with the modulation disabled to provide the level calculated from the wanted signal level and the required level offset in table 2 (FM), as measured at (C), with the 'wanted' generator switched off.
The both signal generator is switched back on. Modulation is enabled for both signal generators.
The receiver is tuned to the frequency of the 'wanted' signal generator. The receiver shall be tuned for optimum THD+N (i.e. as it would be tuned by a user for best quality). The receiver's audio level shall be set so as to provide clean 1 kHz audio tone at the audio output (minimum distortion, that is typically less than 3 % total harmonic distortion, but no more than 10 % total harmonic distortion) but of sufficient level to drive the measurement device.
The audio output, measured using the measurement device, is recorded as the signal level, S.
The modulating audio signal for the ‘wanted’ signal generator is removed. The audio output, measured using the measurement device, is recorded as the noise level, N.
SNR was calculated by following formula.

SNR = S - N (dBQ)

The impairment criteria given in section 3.6 are met then the EUT has passed the test.

The adjacent channel selectivity and blocking tests ware made with the following detector function of the test audio analyzer.

ETSI EN 303 345-1

Modulation method	Measurement device on audio output
Analogue (FM)	Quasi-peak detector employing Recommendation ITU-R BS.468-4, clause 1

6. 5 Results

Summary of the test results : Pass

Appendix 1: Photographs of test setup

Sensitivity, Adjacent channel selectivity and blocking

Mode: FM Reception

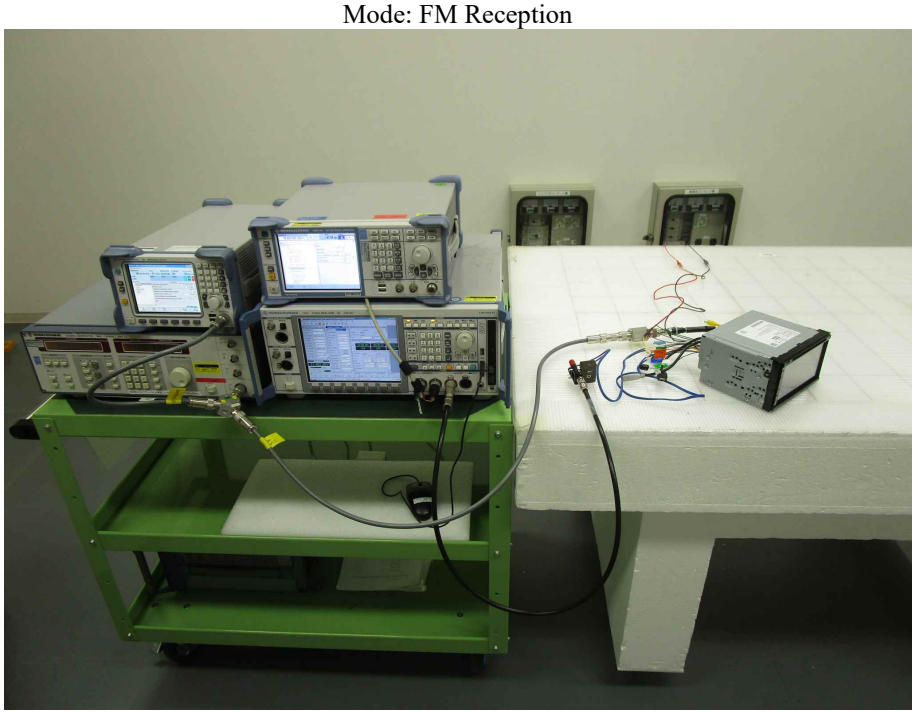

Sensitivity test

UL Japan, Inc. Shonan EMC Lab.
Test Room : No.1 Shielded room
Order No. : 13946443S

Company : JVCKENWOOD Corporation
Equipment : GPS NAVIGATION SYSTEM
Model No. : DNX5190DABS
Serial No. : PE-X0002
Power : DC 12 V
Standard : EN 303 345-1 V1.1.1
EN 303 345-3 V1.1.1

Date of test. : August 11, 2021
Temp. / Humid. : 22 deg.C / 45 % RH
Atmosphere : 1011 hPa

Engineer : Akihiro Oda

■ Tuner port is "Main" only. ☐ Tuner port: "Main" ☐ Tuner port: "Sub"
☐ Tuner port: "Main" (At the specified input signal level, the sub port could not receive.)

Conducted							
Test Mode	Frequency (MHz)	Limit (dBm)	THD+N, Clean Audio	S (dBQ)	N (dBQ)	SNR (dBQ)	SNR Result
-	-						
	-						
	-						
2.FM Reception	98.000	-90.0	Pass	-5.7	-52.9	47.2	Pass

Test Result: ■ Pass ☐ Fail

Adjacent channel selectivity and Blocking test

UL Japan, Inc. Shonan EMC Lab.
Test Room : No.1 Shielded room
Order No. : 13946443S

Company : JVCKENWOOD Corporation
Equipment : GPS NAVIGATION SYSTEM
Model No. : DNX5190DABS
Serial No. : PE-X0002
Power : DC 12 V
Standard : EN 303 345-1 V1.1.1
EN 303 345-3 V1.1.1

Date of test. : August 11, 2021
Temp. / Humid. : 22 deg.C / 45 % RH
Atmosphere : 1011 hPa

Engineer : Akihiro Oda

■ Tuner port is "Main" only. ☐ Tuner port: "Main" ☐ Tuner port: "Sub"
☐ Tuner port: "Main" (At the specified input signal level, the sub port could not receive.)

Conducted	**Adjacent channel selectivity test**						**FM: N=+2**		
Test Mode	Wanted		Unwanted		THD+N, Clean Audio	S (dBQ)	N (dBQ)	SNR (dBQ)	SNR Result
	Frequency (MHz)	Limit (dBm)	Frequency (MHz)	I/C ratio (dB)					
-	-								
	-								
	-								
2.FM Reception	98.000	-84.0	98.200	3	Pass	-5.6	-55.5	49.9	Pass

Conducted	**Adjacent channel selectivity test**						**FM: N=+3**		
Test Mode	Wanted		Unwanted		THD+N, Clean Audio	S (dBQ)	N (dBQ)	SNR (dBQ)	SNR Result
	Frequency (MHz)	Limit (dBm)	Frequency (MHz)	I/C ratio (dB)					
-	-								
	-								
	-								
2.FM Reception	98.000	-84.0	98.300	17	Pass	-5.6	-55.3	49.7	Pass

Conducted	**Adjacent channel selectivity test**						**FM: N=+4**		
Test Mode	Wanted		Unwanted		THD+N, Clean Audio	S (dBQ)	N (dBQ)	SNR (dBQ)	SNR Result
	Frequency (MHz)	Limit (dBm)	Frequency (MHz)	I/C ratio (dB)					
-	-								
	-								
	-								
2.FM Reception	98.000	-84.0	98.400	30	Pass	-5.6	-55.4	49.8	Pass

Conducted	**Blocking test**								
Test Mode	Wanted		Unwanted		THD+N, Clean Audio	S (dBQ)	N (dBQ)	SNR (dBQ)	SNR Result
	Frequency (MHz)	Limit (dBm)	Frequency (MHz)	I/C ratio (dB)					
-	-								
	-								
	-								
2.FM Reception	98.000	-84.0	98.800	30	Pass	-5.6	-55.4	49.8	Pass

Test Result: ■ Pass ☐ Fail

Adjacent channel selectivity and Blocking test

UL Japan, Inc. Shonan EMC Lab.
Test Room : No.1 Shielded room
Order No. : 13946443S

Company : JVCKENWOOD Corporation
Equipment : GPS NAVIGATION SYSTEM
Model No. : DNX5190DABS
Serial No. : PE-X0002
Power : DC 12 V
Standard : EN 303 345-1 V1.1.1
EN 303 345-3 V1.1.1

Date of test. : August 11, 2021
Temp. / Humid. : 22 deg.C / 45 % RH
Atmosphere : 1011 hPa

Engineer : Akihiro Oda

■ Tuner port is "Main" only. ☐ Tuner port: "Main" ☐ Tuner port: "Sub"
☐ Tuner port: "Main" (At the specified input signal level, the sub port could not receive.)

Conducted	**Adjacent channel selectivity test**						**FM: N=-2**		
Test Mode	Wanted		Unwanted		THD+N, Clean Audio	S (dBQ)	N (dBQ)	SNR (dBQ)	SNR Result
	Frequency (MHz)	Limit (dBm)	Frequency (MHz)	I/C ratio (dB)					
-	-								
	-								
	-								
2.FM Reception	98.000	-84.0	97.800	3	Pass	-5.6	-55.4	49.8	Pass

Conducted	**Adjacent channel selectivity test**						**FM: N=-3**		
Test Mode	Wanted		Unwanted		THD+N, Clean Audio	S (dBQ)	N (dBQ)	SNR (dBQ)	SNR Result
	Frequency (MHz)	Limit (dBm)	Frequency (MHz)	I/C ratio (dB)					
-	-								
	-								
	-								
2.FM Reception	98.000	-84.0	97.700	17	Pass	-5.6	-55.3	49.7	Pass

Conducted	**Adjacent channel selectivity test**						**FM: N=-4**		
Test Mode	Wanted		Unwanted		THD+N, Clean Audio	S (dBQ)	N (dBQ)	SNR (dBQ)	SNR Result
	Frequency (MHz)	Limit (dBm)	Frequency (MHz)	I/C ratio (dB)					
-	-								
	-								
	-								
2.FM Reception	98.000	-84.0	97.600	30	Pass	-5.6	-55.4	49.8	Pass

Conducted	**Blocking test**								
Test Mode	Wanted		Unwanted		THD+N, Clean Audio	S (dBQ)	N (dBQ)	SNR (dBQ)	SNR Result
	Frequency (MHz)	Limit (dBm)	Frequency (MHz)	I/C ratio (dB)					
-	-								
	-								
	-								
2.FM Reception	98.000	-84.0	97.200	30	Pass	-5.6	-55.4	49.8	Pass

Test Result: ■ Pass ☐ Fail

APPENDIX 3

Test Instruments

EMS test equipment

Test Name	Local ID	LIMS ID	Description	Manufacturer	Model	Serial	Last Calibration Date	Calibration Interval (Month)
Sen,ACS & BL	KJM-09	145929	Measure	KOMELON	KMC-36	-	-	-
Sen,ACS & BL	KMP-08	146512	Matching Pad	TAMAGAWA	ZT-130	1209458	2021/06/08	12
Sen,ACS & BL	KMP-09	146513	Matching Pad	TAMAGAWA	ZT-130	1454514E	2021/06/08	12
Sen,ACS & BL	SAA-01	145123	Audio Analyzer	Rohde & Schwarz	UPV	101292	2020/12/23	12
Sen,ACS & BL	SBM-02	145051	Barometer	Sunoh	SBR121	1004	2020/09/29	36
Sen,ACS & BL	SDR4-02	145485	Dummy Load	Erika Fiedler	4 ohm	-	2021/03/23	12
Sen,ACS & BL	SMC50-01	146312	Coupling Circuit	JFW	50PD-133	43606 46-423-1	2021/05/26	12
Sen,ACS & BL	SOS-16	167990	Humidity Indicator	CUSTOM. Inc	CTH-202	708Q08R	2020/10/01	12
Sen,ACS & BL	SSG-10	146255	Signal Generator	Rohde & Schwarz	SMY01	839069/006	2021/05/27	12
Sen,ACS & BL	SSG-12	146257	Signal Generator	Rohde & Schwarz	SMBV100A	262152	2020/08/24	12
Sen,ACS & BL	STR-01	145790	Test Receiver	Rohde & Schwarz	ESU40	100093	2021/04/27	12
Sen,ACS & BL	STS-01	145792	Digital Hitester	HIOKI E.E. CORPORATION	3805-50	80997812	2020/10/19	12
Sen,ACS & BL	STV-01	145623	Digital TV Signal Generator	Rohde & Schwarz	SFE	100519	2020/12/22	12

*Hyphens for Last Calibration Date and Cal Int (month) are instruments that Calibration is not required (e.g. software), or instruments checked in advance before use.

The expiration date of the calibration is the end of the expired month.
As for some calibrations performed after the tested dates , those test equipment have been controlled by means of an unbroken chains of calibrations.

All equipment is calibrated with valid calibrations . Each measurement data is traceable to the national or international standards
Test Item:
Sen: Sensitivity test
ACS & BL: Adjacent channel selectivity and Blocking test
End of Report