SYMBOL	MN NO	SHEET NO	ADDRESS	ISSUED	DATE

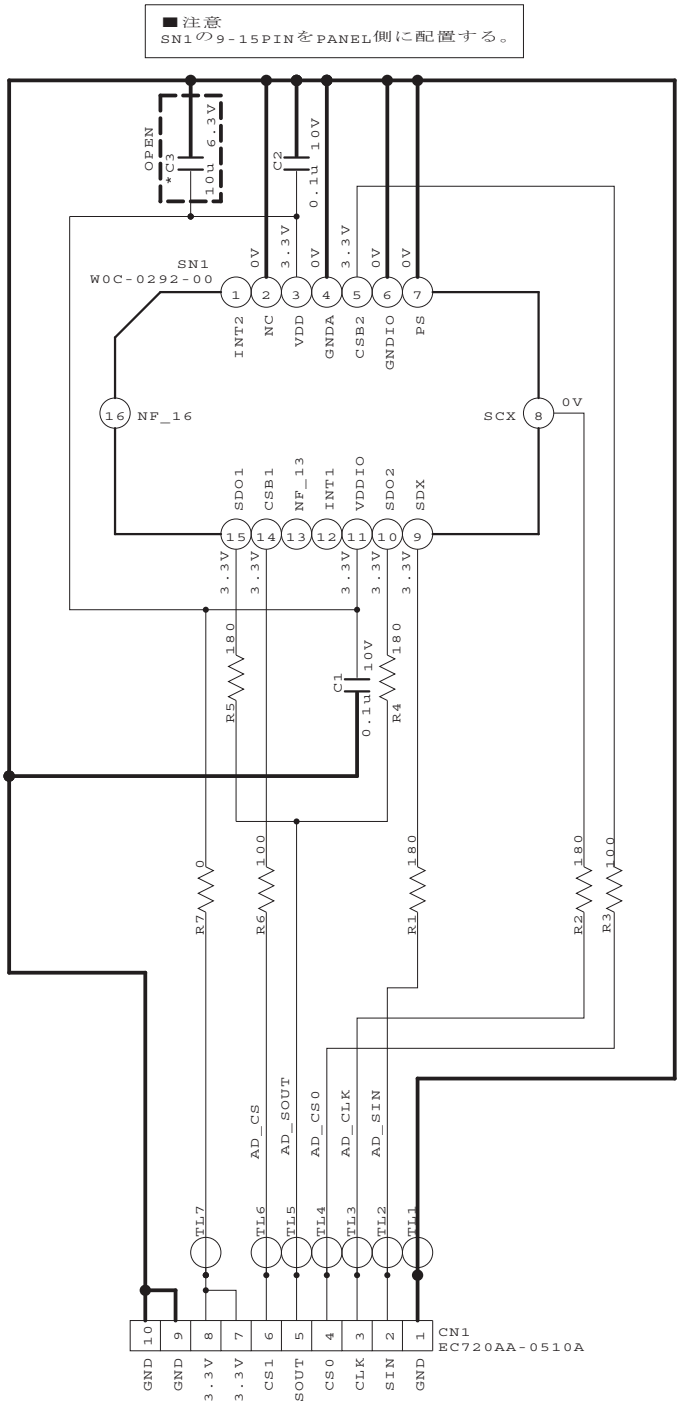

Gyro Sensor PWB

MODEL NAME :

CAUTION:
FOR CONTINUED SAFETY REPLACE SAFETY CRITICAL COMPONENTS ONLY WITH MANUFACTURER'S RECOMMENDED PARTS INDICATES SAFETY CRITICAL COMPONENTS.
⚠ TO REDUCE RISK OF ELECTRIC SHOCK, LEAKAGE CURRENT APPLIANCE IS RETURNED TO THE CUSTOMER.
(EXPOSED PARTS ARE ACCEPTABLY INSULATED FROM SUPPLY CIRCUIT.)

KENWOOD
DNX7190DABS

JVCKENWOOD Corporation