Block Diagram
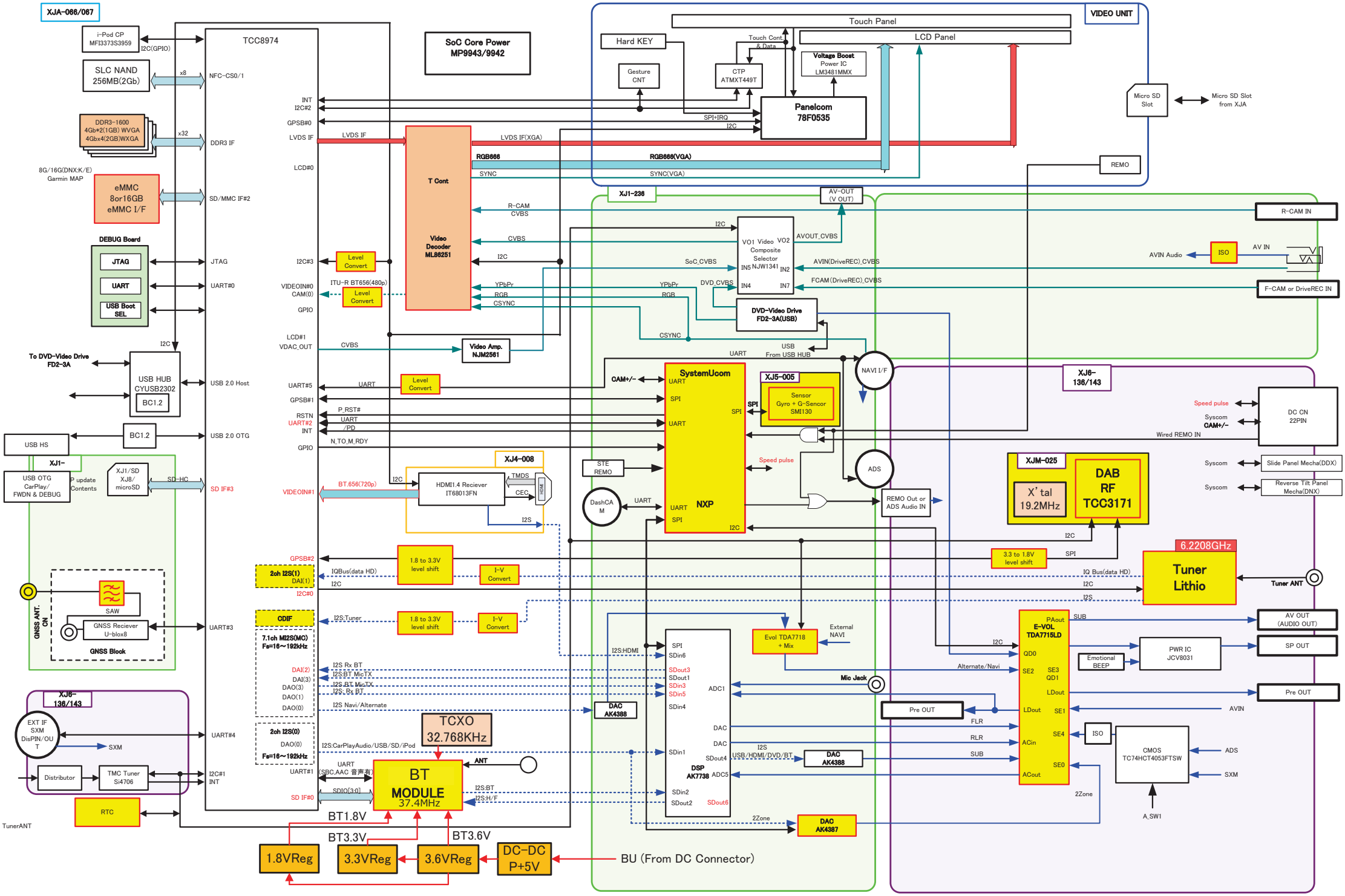
KENWOOD DNX7190DABS