RADIO TEST REPORT

Test Report No. : 13705785S

Applicant	:	**JVCKENWOOD Corporation**
Type of EUT	:	**GPS NAVIGATION SYSTEM**
Model Number of EUT	:	**DNX5190DABS**
Test standard	:	**ETSI EN 300 328 V2.2.2**
Test item	:	**Occupied Channel Bandwidth (Reference data)** **Receiver Blocking**
Test Result	:	**Complied (Refer to SECTION 3.2)**

1. This test report shall not be reproduced in full or partial, without the written approval of UL Japan, Inc.
2. The results in this report apply only to the sample tested.
3. This sample tested is in compliance with the limits of the above standard.
4. The test results in this test report are traceable to the national or international standards.
5. This test report covers Radio technical requirements.
   It does not cover administrative issues such as Manual or non-Radio test related Requirements. (if applicable)
6. The all test items in this test report are conducted by UL Japan, Inc. Shonan EMC Lab.
7. The opinions and the interpretations to the result of the description in this report are outside scopes where UL Japan has been accredited.
8. The information provided from the customer for this report is identified in SECTION 1.

Date of test: February 22, 2021

Representative test engineer:

Toshinori Yamada
Engineer
Consumer Technology Division

Approved by :

Hikaru Shirasawa
Engineer
Consumer Technology Division

Testing LAB
RTL02610

☐ The testing in which "Non-accreditation" is displayed is outside the accreditation scopes in UL Japan.
☒ There is no testing item of "Non-accreditation".

REVISION HISTORY

Original Test Report No.: 13705785S

Revision	Test report No.	Date	Page revised	Contents
- (Original)	13705785S	March 11, 2021	-	-

Reference: Abbreviations (Including words undescribed in this report)

A2LA	The American Association for Laboratory Accreditation
AC	Alternating Current
AFH	Adaptive Frequency Hopping
AM	Amplitude Modulation
Amp, AMP	Amplifier
ANSI	American National Standards Institute
Ant, ANT	Antenna
AP	Access Point
ASK	Amplitude Shift Keying
Atten., ATT	Attenuator
AV	Average
BPSK	Binary Phase-Shift Keying
BR	Bluetooth Basic Rate
BT	Bluetooth
BT LE	Bluetooth Low Energy
BW	BandWidth
Cal Int	Calibration Interval
CCK	Complementary Code Keying
Ch., CH	Channel
CISPR	Comite International Special des Perturbations Radioelectriques
CW	Continuous Wave
DBPSK	Differential BPSK
DC	Direct Current
D-factor	Distance factor
DFS	Dynamic Frequency Selection
DQPSK	Differential QPSK
DSSS	Direct Sequence Spread Spectrum
EDR	Enhanced Data Rate
EIRP, e.i.r.p.	Equivalent Isotropically Radiated Power
EMC	ElectroMagnetic Compatibility
EMI	ElectroMagnetic Interference
EN	European Norm
ERP, e.r.p.	Effective Radiated Power
EU	European Union
EUT	Equipment Under Test
Fac.	Factor
FCC	Federal Communications Commission
FHSS	Frequency Hopping Spread Spectrum
FM	Frequency Modulation
Freq.	Frequency
FSK	Frequency Shift Keying
GFSK	Gaussian Frequency-Shift Keying
GNSS	Global Navigation Satellite System
GPS	Global Positioning System
Hori.	Horizontal
ICES	Interference-Causing Equipment Standard
IEC	International Electrotechnical Commission
IEEE	Institute of Electrical and Electronics Engineers
IF	Intermediate Frequency
ILAC	International Laboratory Accreditation Conference
ISED	Innovation, Science and Economic Development Canada
ISO	International Organization for Standardization
JAB	Japan Accreditation Board
LAN	Local Area Network
LIMS	Laboratory Information Management System
MCS	Modulation and Coding Scheme
MRA	Mutual Recognition Arrangement
N/A	Not Applicable
NIST	National Institute of Standards and Technology
NS	No signal detect.
NSA	Normalized Site Attenuation
NVLAP	National Voluntary Laboratory Accreditation Program
OBW	Occupied Band Width
OFDM	Orthogonal Frequency Division Multiplexing
P/M	Power meter
PCB	Printed Circuit Board
PER	Packet Error Rate
PHY	Physical Layer
PK	Peak
PN	Pseudo random Noise
PRBS	Pseudo-Random Bit Sequence
PSD	Power Spectral Density
QAM	Quadrature Amplitude Modulation
QP	Quasi-Peak
QPSK	Quadri-Phase Shift Keying
RBW	Resolution Band Width
RDS	Radio Data System
RE	Radio Equipment
RF	Radio Frequency
RMS	Root Mean Square
RSS	Radio Standards Specifications
Rx	Receiving
SA, S/A	Spectrum Analyzer
SG	Signal Generator
SVSWR	Site-Voltage Standing Wave Ratio
TR	Test Receiver
Tx	Transmitting
VBW	Video BandWidth
Vert.	Vertical
WLAN	Wireless LAN

CONTENTS **PAGE**

SECTION 1: Customer information 5

SECTION 2: Equipment under test (EUT) 5

SECTION 3: Test specification, procedures & results 6

SECTION 4: Operation of EUT during testing 8

SECTION 5: Antenna Terminal Conducted Tests 10

APPENDIX 1: Test data 11

Occupied Channel Bandwidth (Reference data) 11
Receiver Blocking 12

APPENDIX 2: Test instruments 14

APPENDIX 3: Photographs of test setup 15

Receiver Blocking 15

SECTION 1: Customer information

Company Name	:	JVCKENWOOD Corporation
Address	:	2967-3, Ishikawa-machi, Hachioji, Tokyo 192-8525 Japan
Telephone Number	:	+81-42-646-5525
Facsimile Number	:	+81-42-646-1440
Contact Person	:	Seigo Tsutsumi

The information provided from the customer is as follows;
- Applicant, Type of EUT, Model Number of EUT on the cover page and other relevant pages
- Operating/Test Mode(s) (Mode(s)) on all the relevant pages
- SECTION 1: Customer information
- SECTION 2: Equipment under test (EUT) other than the Receipt Date
- SECTION 4: Operation of EUT during testing

* The laboratory is exempted from liability of any test results affected from the above information in SECTION 2 and 4.

SECTION 2: Equipment under test (EUT)

2.1 Identification of EUT

Type	:	GPS NAVIGATION SYSTEM
Model Number	:	DNX5190DABS
Serial Number	:	Refer to SECTION 4.2
Rating	:	DC 12 V
Receipt Date	:	February 8, 2021
Country of Mass-production	:	Indonesia
Condition	:	Production prototype (Not for Sale: This sample is equivalent to mass-produced items.)
Modification	:	No Modification by the test lab.

2.2 Product Description

Model: DNX5190DABS (referred to as the EUT in this report) is a GPS NAVIGATION SYSTEM.

Clock frequency(ies) in the system : 6.2208 GHz (Maximum)

Similar Model

Model Name	Difference
DNX5190DABS	Base
DNX7190DABS	Slide Panel
DDX819WBTS	None Navigation function, Wide Panel
DMX8019S	None Navigation function, None DVD function

Radio Specification

Radio Type	:	Transceiver
Frequency of Operation	:	2402 MHz - 2480 MHz
Modulation	:	FHSS
Antenna type	:	Chip Antenna
Antenna Gain	:	-2.3 dBi
Clock frequency (Maximum)	:	37.4 MHz
Power Supply (radio art input)	:	DC 3.6 V/ 3.3 V/1.8 V

SECTION 3: Test specification, procedures & results

3.1 Test Specification

Radio : ETSI EN 300 328 V2.2.2

Title : Wideband transmission systems;
Data transmission equipment operating in the 2,4 GHz band;
Harmonised Standard for access to radio spectrum

Test report: 12685233S-A and 13705785S (this report) include information of all the requirements in EN 300 328 V2.2.2.
13705785S is for updating the test standard: EN 300 328 from V2.1.1 to V2.2.2 and it only includes the requirements newly introduced in EN 300 328 V2.2.2.
Therefore only following test was performed in this report (See clause 3.2).

3.2 Procedures and results

Item	Test Procedure	Limit	Test method	Worst margin	Results	Remarks
Occupied Channel Bandwidth	Clause 5.4.7	-	Conducted	-	Complied a)	*1)
Receiver Blocking	Clause 5.4.11	Clause 4.3.1.12	Conducted	-	Complied b)	-
Note: UL Japan, Inc.'s EMI Work Procedure 13-EM-W0420. *1) Reference data a) Refer to APPENDIX 1 (data of Occupied Channel Bandwidth) b) Refer to APPENDIX 1 (data of Receiver Blocking)						
Symbols: Complied The data of this test item has enough margin, more than the measurement uncertainty. Complied# The data of this test item meets the limits unless the measurement uncertainty is taken into consideration.						

3.3 Additions or deviations to standards

No addition, exclusion nor deviation has been made from the standard.

3.4 Uncertainty

Although this standard determines only the limit value of uncertainty, there is no applicable rule of uncertainty in this. Therefore, the results are derived depending on whether or not laboratory uncertainty is applied.

The following uncertainties have been calculated to provide a confidence level of 95 % using a coverage factor $k = 2$.

Antenna terminal test	Uncertainty (+/-)
Bandwidth Measurement	0.012 %
Receiver Blocking (Wanted RF Level)_SBTR01	2.13 dB
Receiver Blocking (Blocking Signal Level)_SBTR01	1.70 dB
Receiver Blocking (Wanted RF Level)_CMW270 (BT)	2.8 dB
Receiver Blocking (Blocking Signal Level)_CMW270 (BT)	1.9 dB
Receiver Blocking (Blocking Signal Level)_without tester	1.9 dB

3.5 Test Location

UL Japan, Inc. Shonan EMC Lab.
1-22-3, Megumigaoka, Hiratsuka-shi, Kanagawa-ken 259-1220 JAPAN
Telephone: +81 463 50 6400, Facsimile: +81 463 50 6401
JAB Accreditation No. RTL02610

Test site	Width x Depth x Height (m)	Size of reference ground plane (m) / horizontal conducting plane	Maximum measurement distance
No.1 Semi-anechoic chamber	20.6 x 11.3 x 7.65	20.6 x 11.3	10 m
No.2 Semi-anechoic chamber	20.6 x 11.3 x 7.65	20.6 x 11.3	10 m
No.3 Semi-anechoic chamber	12.7 x 7.7 x 5.35	12.7 x 7.7	5 m
No.4 Semi-anechoic	8.1 x 5.1 x 3.55	8.1 x 5.1	-
No.1 Shielded room	6.8 x 4.1 x 2.7	6.8 x 4.1	-
No.2 Shielded room	6.8 x 4.1 x 2.7	6.8 x 4.1	-
No.3 Shielded room	6.3 x 4.7 x 2.7	6.3 x 4.7	-
No.4 Shielded room	4.4 x 4.7 x 2.7	4.4 x 4.7	-
No.5 Shielded room	7.8 x 6.4 x 2.7	7.8 x 6.4	-
No.6 Shielded room	7.8 x 6.4 x 2.7	7.8 x 6.4	-
No.8 Shielded room	3.45 x 5.5 x 2.4	3.45 x 5.5	-
No.1 Measurement room	2.55 x 4.1 x 2.5	-	-

3.6 Test data, Test instruments, and Test set up

Refer to APPENDIX.

SECTION 4: Operation of EUT during testing

4.1 Operating Mode(s)

Details of Operating Mode(s)

Test item	Operating mode	Tested frequency
Occupied channel bandwidth	Transmitting Hopping Off , Payload: PRBS9 - DH1	2402 MHz, 2480 MHz
Receiver Blocking	Communication mode (Device Under Test mode) - DH1	Hopping
*EUT has the power settings by the software as follows; - Power settings: Fixed - Software: SoC : 0.0.3209.4000 Syscom : 1.0.0209.3100 Panel : 1.0.0159.3700 This setting of software is the worst case. Any conditions under the normal use do not exceed the condition of setting. In addition, end users cannot change the settings of the output power of the product.		

4.2 Configuration and peripherals

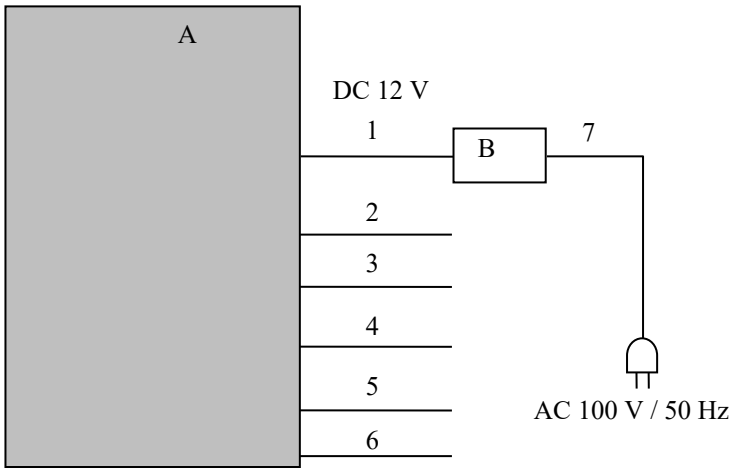

Description of EUT and Support equipment

No.	Item	Model number	Serial number	Manufacturer	Remark
A	GPS NAVIGATION SYSTEM	DNX5190DABS	PE-X0010	JVCKENWOOD	EUT
B	DC Power Supply	SPI008	-	GOODGOODS	-

List of cables used

No.	Name	Length (m)	Shield		Remark
			Cable	Connector	
1	DC	1.5 + 1.0	Unshielded	Unshielded	-
2	Signal	0.15	Unshielded	Unshielded	13 lines
3	USB	0.15	Shielded	Shielded	-
4	Antenna	0.15	Shielded	Shielded	-
5	Signal	0.15	Shielded	Shielded	3 lines
6	Coaxil	0.1	Shielded	Shielded	-
7	AC	1.0	Shielded	Shielded	3 lines

SECTION 5: Antenna Terminal Conducted Tests

Test Procedure

The tests were made with below setting connected to the antenna port.

Test	Instrument used	Remark
Occupied Channel Bandwidth (Reference)	Spectrum Analyzer	Normal condition
Receiver Blocking	Wireless Connectivity Tester	Normal condition

The test results are rounded off to two decimals place, so some differences might be observed.
The equipment and cables were not used for factor 0.0 dB of the data sheets.

Test data : APPENDIX
Test result : Pass

APPENDIX 1: Test data

Occupied Channel Bandwidth (Reference data)

Report No.	13705785S
Test place	Shonan EMC Lab. No.5 Shielded Room
Date	February 22, 2021
Temperature / Humidity	23 deg. C / 49 % RH
Engineer	Toshinori Yamada
Mode	Tx, Hopping Off

Mode	Frequency [MHz]	Bandwidth [MHz]	Result [MHz]	Limit [MHz]
DH1	2402	0.8828	2401.5586	> 2400
	2480	0.8825	2480.4412	< 2483.5

DH1

2402 MHz

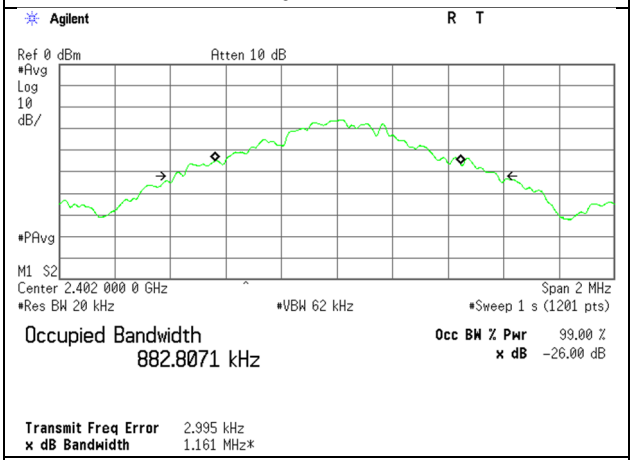

2480 MHz

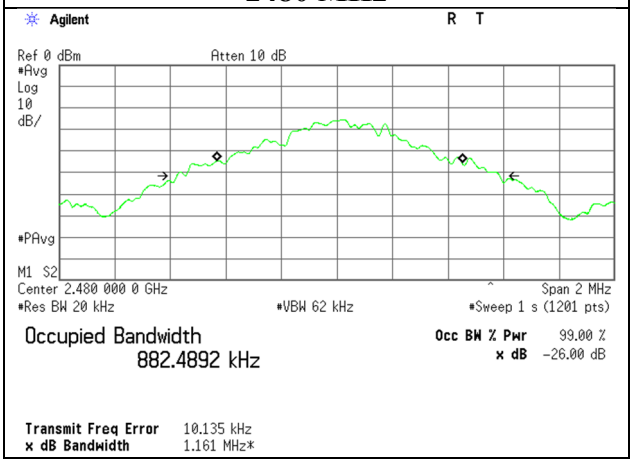

Receiver Blocking

Report No.	13705785S
Test place	Shonan EMC Lab. No.5 Shielded Room
Date	February 22, 2021
Temperature / Humidity	23 deg. C / 49 % RH
Engineer	Toshinori Yamada
Mode	Communication mode (Hopping)

Wanted signal mean power from companion device (dBm)	
	DH1
-139 dBm + 10 × log10(OCBW) + 10	-69.54

OCBW= Refer to DH1 OCBW, Lch or Hch , whichever is smaller

Receiver Category 2 equipment

Operating mode	Blocking signal power(dBm)	Blocking signal power (corrected by the actual antenna assembly gain) (dBm) *2)	Wanted signal mean power from companion device (dBm)	Wanted signal mean power from companion device (corrected by the actual antenna assembly gain)(dBm) *3)	Blocking signal frequency (MHz)	Result PER (%)	Limit PER (%)
DH1	-34.00	-36.30	-69.54 *1)	-71.84	2300	0.04	≦10
					2380	0.00	
					2504	0.02	
					2584	0.04	

*1) Wanted signal mean power from companion device was
(-139 dBm + 10 × log10(OCBW) + 10 dB) or (-74 dBm + 10 dB) whichever is less
*2) Adjusted by product antenna gain -2.3 dBi.

CONDUCTED METHODS SYSTEM BLOCK DIAGRAM of Receiver Blocking

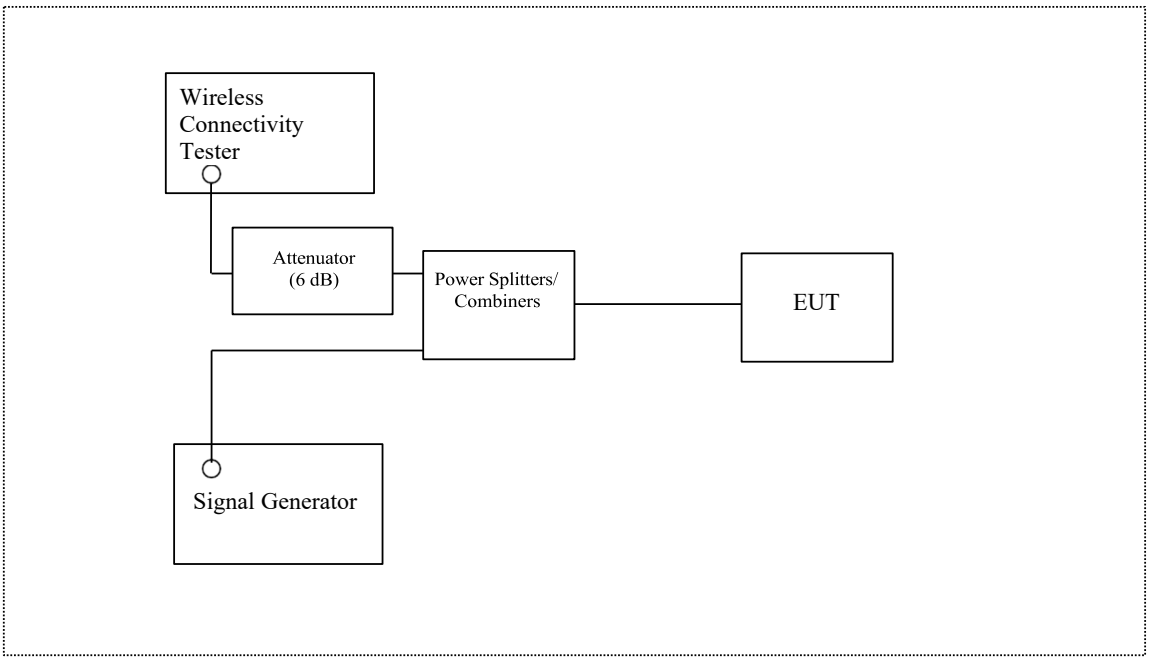

APPENDIX 2: Test instruments

Test equipment

Test Item	Local ID	LIMS ID	Description	Manufacturer	Model	Serial	Last Calibration Date	Cal Int
RB	SAT6-16	197976	Attenuator	JFW	50HF-006	-	2020/04/21	12
RB	SBT-01	158576	Wireless Connectivity Tester	Rohde & Schwarz	CMW270	101015	2020/06/02	12
RB	SCC-G34	151611	Coaxial Cable	Junkosha	MWX241-01000KMSKMS/B	1612Q032	2020/12/21	12
RB	SCC-G35	151612	Coaxial Cable	Junkosha	MWX241-01000KMSKMS/B	1612Q033	2020/12/21	12
RB	SCC-G36	151613	Coaxial Cable	Junkosha	MWX241-01000KMSKMS/B	1612Q034	2020/12/21	12
RB	SOS-27	191845	Humidity Indicator	CUSTOM	CTH-201	-	2020/09/29	12
RB	SPSC-02	146252	Power Splitters/Combiners	Mini-Circuits	ZFSC-2-10G+	-	2020/11/19	12
RB	SSG-13	158037	Signal Generator	Rohde & Schwarz	SMBV100A	262877	2020/08/28	12
RB	STS-05	146212	Digital Hitester	HIOKI	3805-50	80997828	2020/10/19	12
AT	SRENT-22	202830	Spectrum Analyzer	Keysight Technologies Inc	E4440A	MY48250036	2020/11/24	12
AT	SAT10-14	154591	Attenuator	Weinschel Corp.	54A-10	81595	2020/04/01	12
AT	SCC-G65	196942	Coaxial Cable	HUBER+SUNER	SUCOFLEX 102	803416/2	2020/03/10	12

***Hyphens for Last Calibration Date and Cal Int (month) are instruments that Calibration is not required (e.g. software), or instruments checked in advance before use.**

The expiration date of the calibration is the end of the expired month.
As for some calibrations performed after the tested dates, those test equipment have been controlled by means of an unbroken chains of calibrations.

All equipment is calibrated with valid calibrations. Each measurement data is traceable to the national or international standards.

Test item:

RB: Receiver Blocking test
AT: Antenna Terminal Conducted test

APPENDIX 3: Photographs of test setup

Receiver Blocking

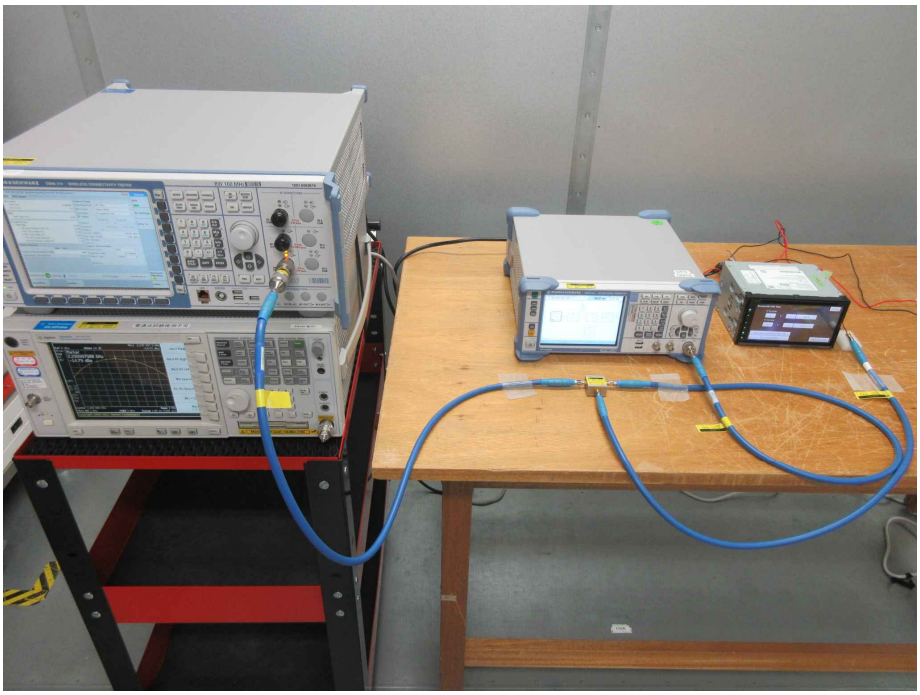

Photo 1

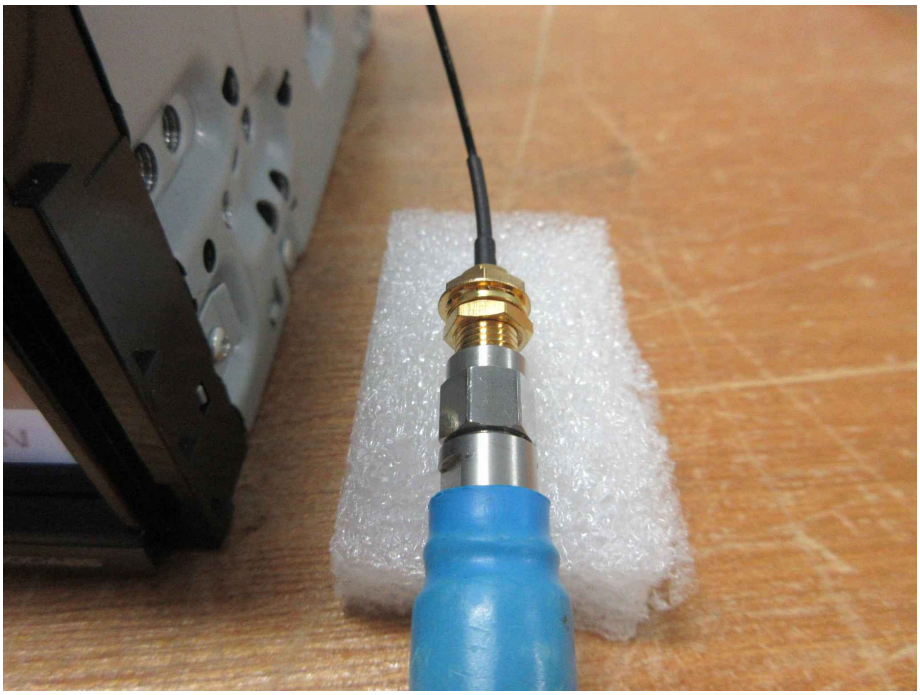

Photo 2

End of Report