SYMBOL	MN NO	SHEET NO	ADDRESS	ISSUED	DATE

All Parts and Ref. are subject to change during the design stages. refer to respective model's schematic for final design.

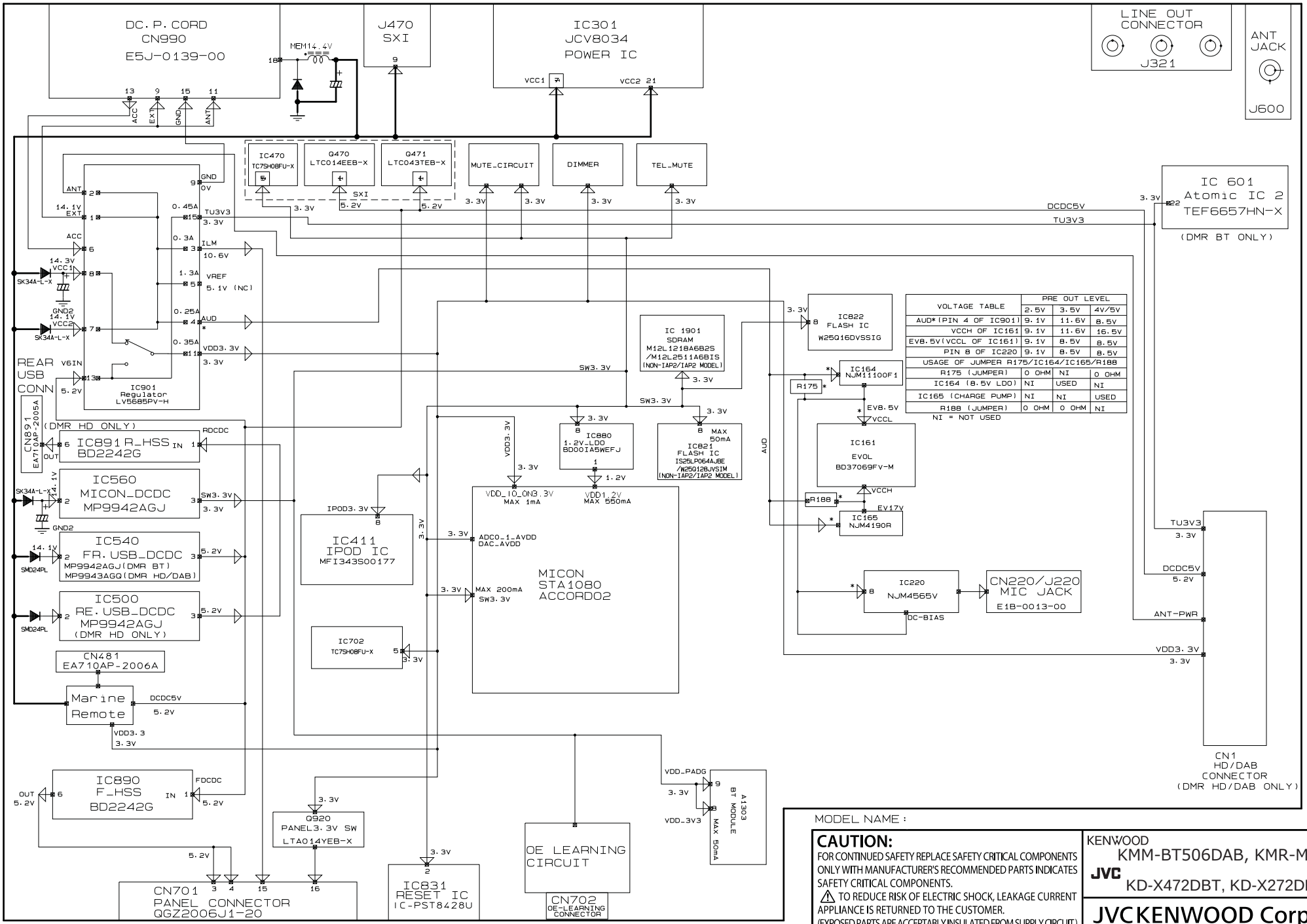

VOLTAGE TABLE	PRE OUT LEVEL		
	2.5V	3.5V	4V/5V
AUD*(PIN 4 OF IC901)	9.1V	11.6V	8.5V
VCCH OF IC161	9.1V	11.6V	16.5V
EV8.5V(VCCL OF IC161)	9.1V	8.5V	8.5V
PIN 8 OF IC220	9.1V	8.5V	8.5V
USAGE OF JUMPER R175/IC164/IC165/R188			
R175 (JUMPER)	0 OHM	NI	0 OHM
IC164 (8.5V LDO)	NI	USED	NI
IC165 (CHARGE PUMP)	NI	NI	USED
R188 (JUMPER)	0 OHM	0 OHM	NI

NI = NOT USED

MODEL NAME :

CAUTION:
FOR CONTINUED SAFETY REPLACE SAFETY CRITICAL COMPONENTS ONLY WITH MANUFACTURER'S RECOMMENDED PARTS INDICATES SAFETY CRITICAL COMPONENTS.
⚠ TO REDUCE RISK OF ELECTRIC SHOCK, LEAKAGE CURRENT APPLIANCE IS RETURNED TO THE CUSTOMER.
(EXPOSED PARTS ARE ACCEPTABLY INSULATED FROM SUPPLY CIRCUIT.)

KENWOOD
KMM-BT506DAB, KMR-M506DAB
JVC
KD-X472DBT, KD-X272DBT

JVCKENWOOD Corporation

SYMBOL	MN NO	SHEET NO	ADDRESS	ISSUED	DATE

All Parts and Ref. are subject to change during the design stages. refer to respective model's schematic for final design.

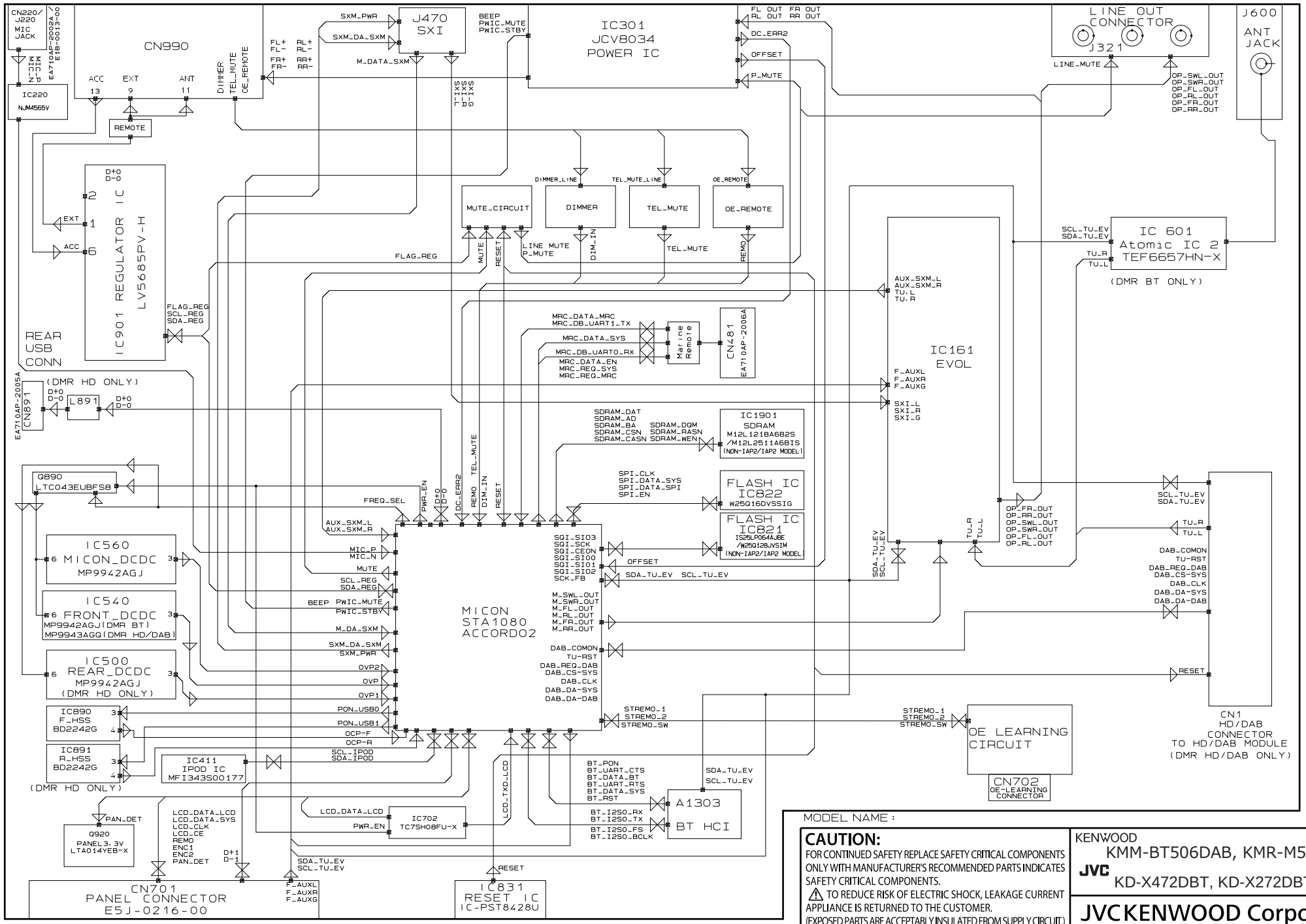

MODEL NAME :

CAUTION:
FOR CONTINUED SAFETY REPLACE SAFETY CRITICAL COMPONENTS ONLY WITH MANUFACTURER'S RECOMMENDED PARTS INDICATES SAFETY CRITICAL COMPONENTS.
⚠ TO REDUCE RISK OF ELECTRIC SHOCK, LEAKAGE CURRENT APPLIANCE IS RETURNED TO THE CUSTOMER.
(EXPOSED PARTS ARE ACCEPTABLY INSULATED FROM SUPPLY CIRCUIT.)

KENWOOD
KMM-BT506DAB, KMR-M506DAB
JVC
KD-X472DBT, KD-X272DBT

JVCKENWOOD Corporation