ISSUED 2019/04/17

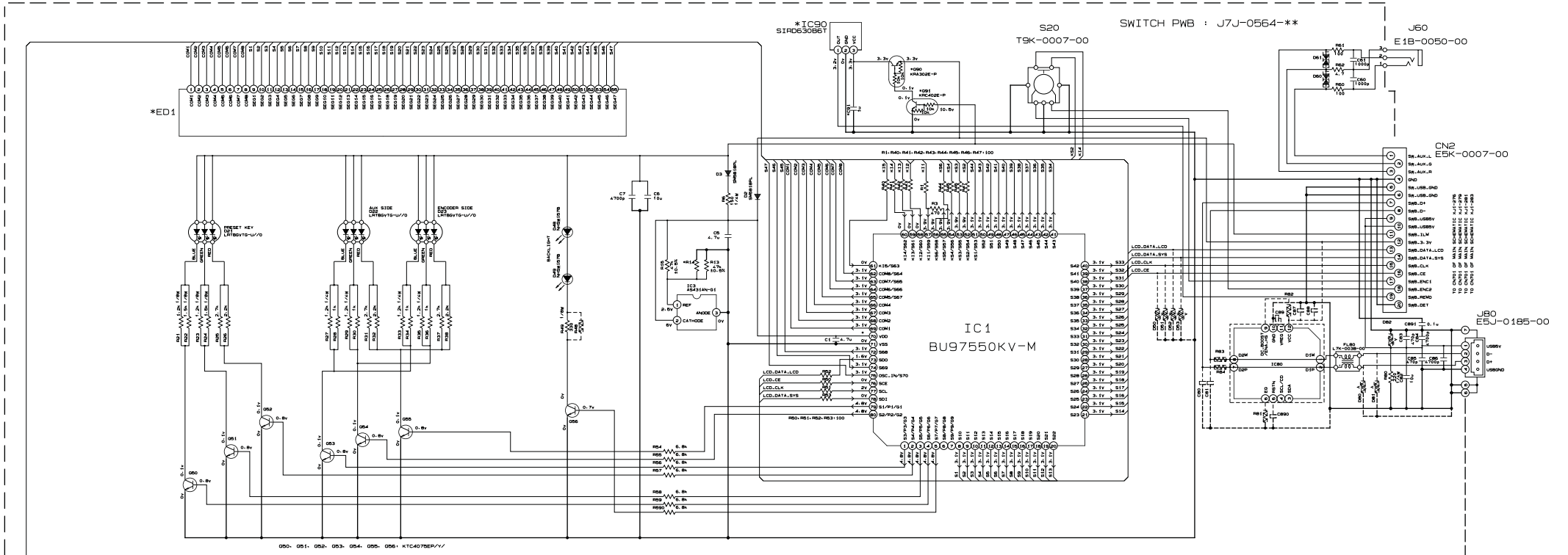

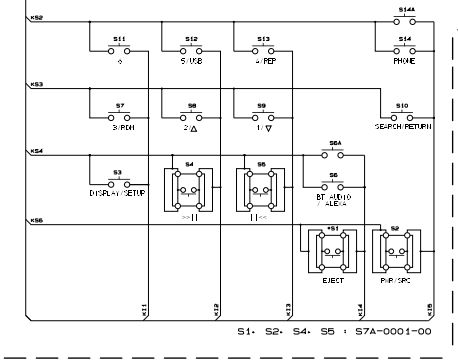

Symbol Number	K-00 CD WITH REMO	K-01 MARINE CD WITH REMO	K-02 DMR WITH REMO	K-03 MARINE DMR WITH REMO	KD-X472DBT	K-02 CD W/OUT REMO
C91	CK73GXR1C105K	CK73GXR1C105K	CK73GXR1C105K	CK73GXR1C105K	-	
IC90	SIRD630B6T	SIRD630B6T	SIRD630B6T	SIRD630B6T	-	
Q90	KRA302E-P	KRA302E-P	KRA302E-P	KRA302E-P	-	
Q91	KRC402E-P	KRC402E-P	KRC402E-P	KRC402E-P	-	
R14	RK73GB2A124J	RK73GB2A104J	RK73GB2A124J	RK73GB2A104J	RK73GB2A124J	RK73GB2A124J
S1	S7A-0001-00	S7A-0001-00	-	-	-	S7A-0001-00
VOLTAGE	6V	6.3V	6V	6.3V	6V	6V

Y-NO	ED1
YJ1-161K-00 YJ1-161K-01 YJ1-161K-02 YJ1-161M-01 YJ1-168K-00 YJ1-168M-01 YJ1-168Q-01 YJ1-171K-00 YJ1-171E-01 YJ1-173E-00	B3H-0131-00
YJ1-161K-03 YJ1-168K-01	B3H-0133-00

MODEL NO	MODEL NAME	UNIT NO
YJ1-161K-00	KD-T918BTSK	XJ6-151K-00
YJ1-161K-01	KD-T910BTSK	XJ6-151K-00
YJ1-161K-02	KD-TD91BTSK	XJ6-151K-00
YJ1-161K-03	KD-T91MBSK	XJ6-151K-01
YJ1-161M-01	KD-T912BTM	XJ6-151K-00
YJ1-168K-00	KD-X370BTSK	XJ6-151K-02
YJ1-168K-01	KD-X37MBSK	XJ6-151K-03
YJ1-168M-01	KD-X472BTM	XJ6-151K-02
YJ1-168Q-01	KD-X375BTQ	XJ6-151K-02
YJ1-171K-00	KD-X470BHSK	XJ6-151K-02
YJ1-171E-01	KD-X472DBTE	XJ6-151E-01
YJ1-173E-00	KD-DB912BTE	XJ6-151E-02

Panel PWB

CONFIDENTIAL

MODEL NAME : REF TO MODEL LIST

CAUTION:
FOR CONTINUED SAFETY REPLACE SAFETY CRITICAL COMPONENTS ONLY WITH MANUFACTURER'S RECOMMENDED PARTS INDICATES SAFETY CRITICAL COMPONENTS.
⚠ TO REDUCE RISK OF ELECTRIC SHOCK, LEAKAGE CURRENT APPLIANCE IS RETURNED TO THE CUSTOMER.
(EXPOSED PARTS ARE ACCEPTABLY INSULATED FROM SUPPLY CIRCUIT).

JVC **KD-X472DBT**

JVCKENWOOD Corporation