CONFIDENTIAL

SYMBOL	MN NO	SHEET NO	ADDRESS	ISSUED DATE
▲1	-	1	Add KMM-BT356 (E) Update Model List (LOC 151)	PHYOE SH. 2019/06/21

ISSUED 2019/06/21

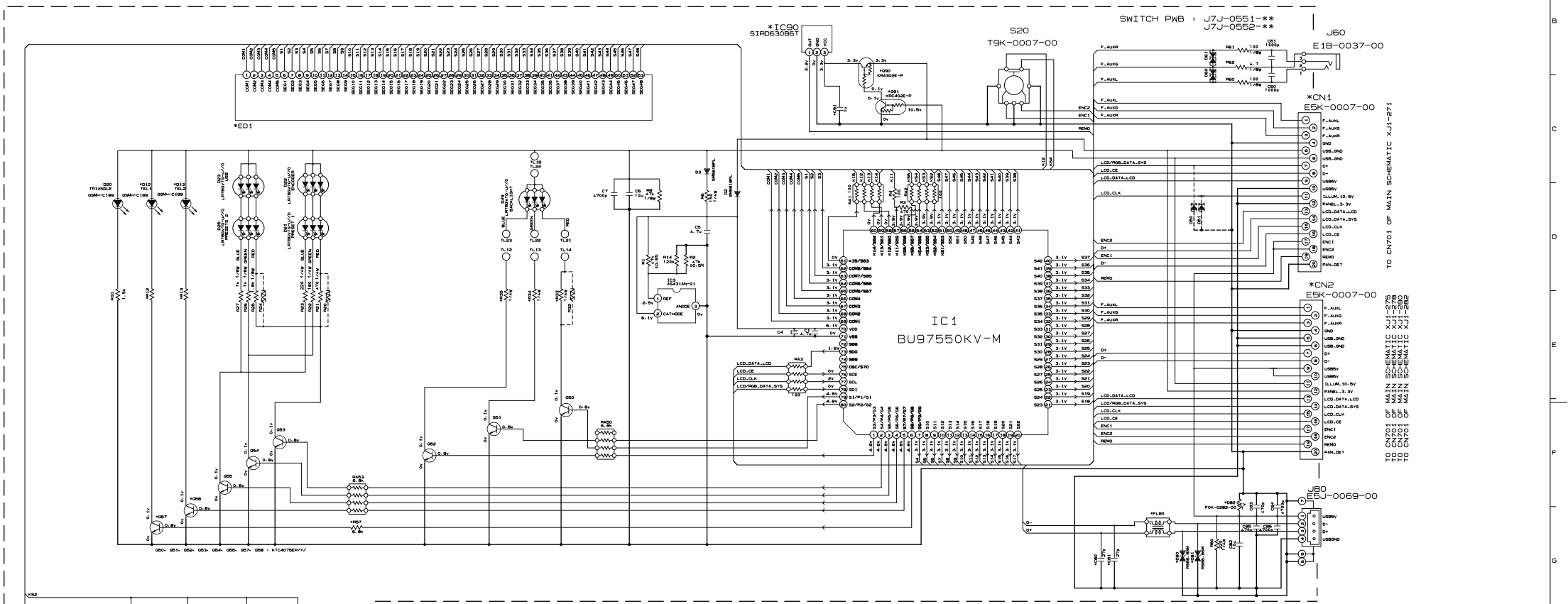

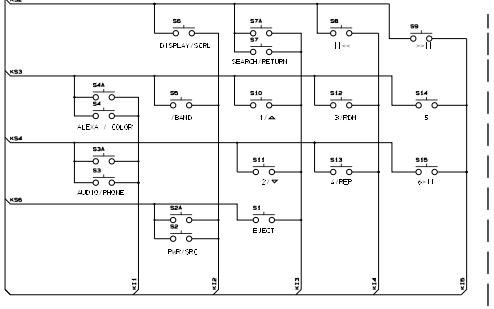

DIFFERENCE TABLE

PCB NO.	J7J-0551-**	KMR-M506DAB	J7J-0552-**	KMM-BT506DAB
Symbol Number	M-01 NO BT I REMO		M-00 BT I REMO	
*C80	CC73GCH1H270J	-		-
*C81	CC73GCH1H270J	-		-
*C91	CK73GXR1A105K	-	CK73GXR1A105K	-
*CN1	E5K-0007-00	-		-
*CN2	-	E5K-0007-00	E5K-0007-00	E5K-0007-00
*D12	-	GSMH-C199	GSMH-C199	GSMH-C199
*D13	-	GSMH-C199	GSMH-C199	GSMH-C199
*D80	RS86-8SM	-		-
*D81	RS86-8SM	-		-
*D82	-	FGK-0282-00	FGK-0282-00	FGK-0282-00
*ED1	B3H-0102-00	B3H-0107-00	B3H-0102-00	B3H-0102-00
*FL80	L3D-0063-00	L7K-0038-00	L7K-0038-00	L7K-0038-00
*IC90	SIRD630B6T	-	IRD630B6T	-
*Q57	-	KTC4075EP/Y/	KTC4075EP/Y/	KTC4075EP/Y/
*Q58	-	KTC4075EP/Y/	KTC4075EP/Y/	KTC4075EP/Y/
*Q90	KRA302E-P	-	RA302E-P	-
*Q91	KRC402E-P	-	RC402E-P	-
*R12	-	RK73B2A182J	RK73B2A182J	RK73B2A182J
*R13	-	RK73B2A182J	RK73B2A182J	RK73B2A182J
*R33	RK73EB2E681J	RK73EB2E561J	RK73EB2E681J	RK73EB2E681J
*R34	RK73EB2E561J	RK73EB2E471J	RK73EB2E561J	RK73EB2E561J
*R35	RK73EB2E561J	RK73EB2E471J	RK73EB2E561J	RK73EB2E561J
*R67	-	RK73B2A682J	RK73B2A682J	RK73B2A682J

Panel PWB

MODEL NAME : REF TO MODEL LIST

CAUTION:
FOR CONTINUED SAFETY REPLACE SAFETY CRITICAL COMPONENTS ONLY WITH MANUFACTURER'S RECOMMENDED PARTS INDICATES SAFETY CRITICAL COMPONENTS.
⚠ TO REDUCE RISK OF ELECTRIC SHOCK, LEAKAGE CURRENT APPLIANCE IS RETURNED TO THE CUSTOMER.
(EXPOSED PARTS ARE ACCEPTABLY INSULATED FROM SUPPLY CIRCUIT)

KENWOOD **KMM-BT506DAB**
KMR-M506DAB

JVCKENWOOD Corporation