ISSUED 2019/07/25

Main PWB 1/4

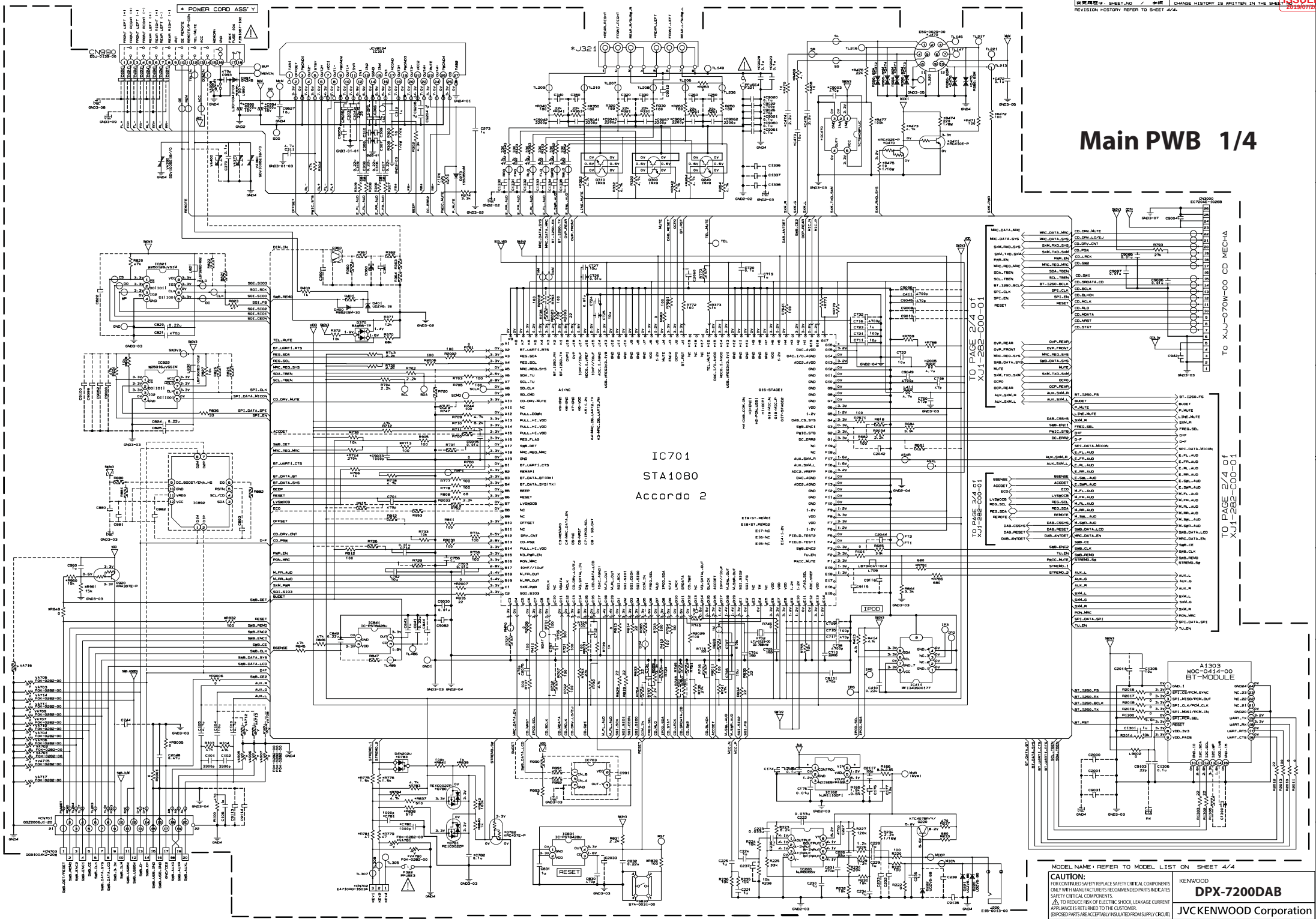

MODEL NAME : REFER TO MODEL LIST ON SHEET 4/4

CAUTION:
FOR CONTINUED SAFETY REPLACE SAFETY CRITICAL COMPONENTS ONLY WITH MANUFACTURER'S RECOMMENDED PARTS INDICATES SAFETY CRITICAL COMPONENTS.
⚠ TO REDUCE RISK OF ELECTRIC SHOCK, LEAKAGE CURRENT APPLIANCE IS RETURNED TO THE CUSTOMER.
(EXPOSED PARTS ARE ACCEPTABLY INSULATED FROM SUPPLY CIRCUIT)

KENWOOD
DPX-7200DAB
JVC KENWOOD Corporation

ISSUED 2019/07/25

Main PWB 2/4

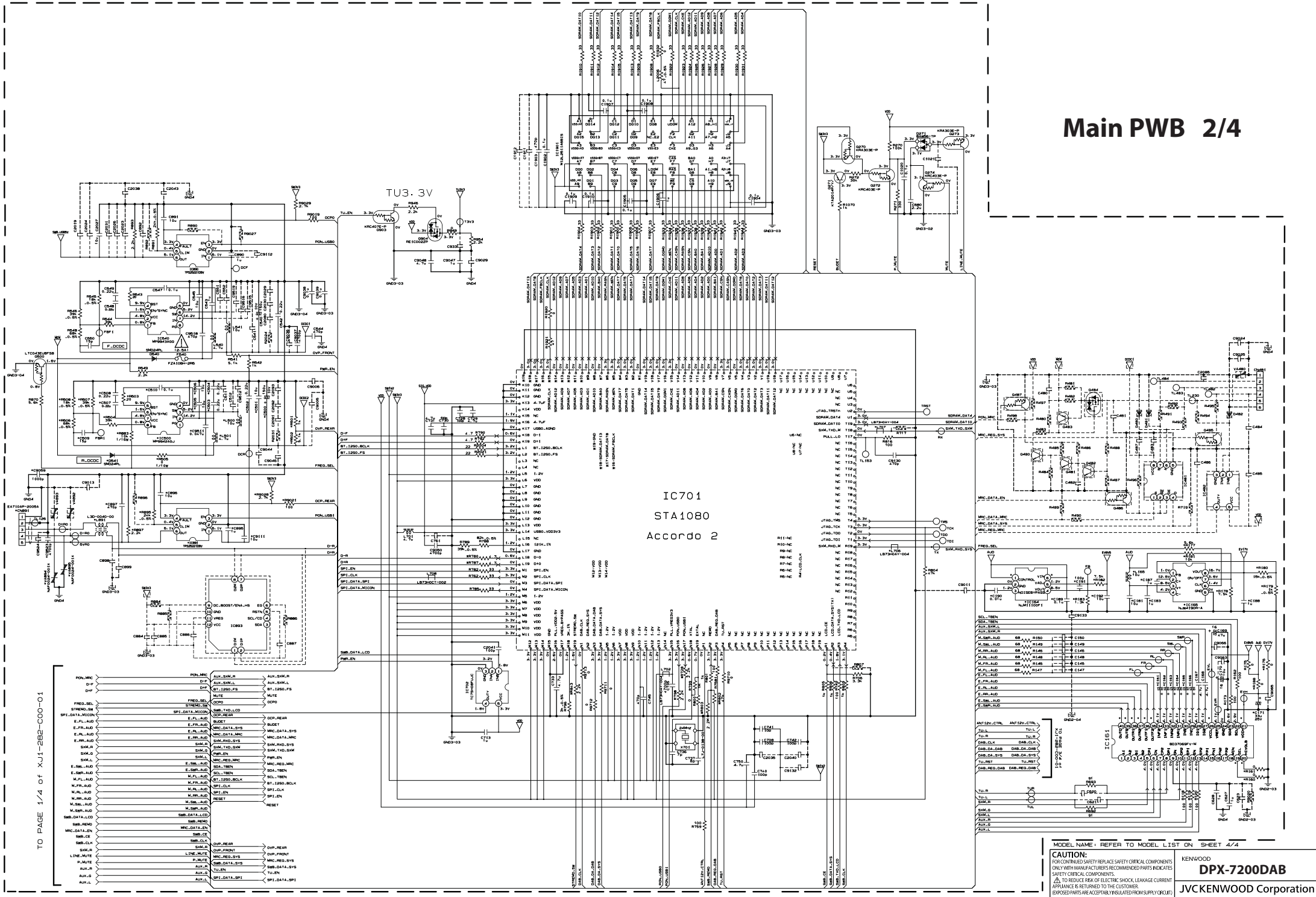

MODEL NAME : REFER TO MODEL LIST ON SHEET 4/4

CAUTION:
FOR CONTINUED SAFETY REPLACE SAFETY CRITICAL COMPONENTS ONLY WITH MANUFACTURER'S RECOMMENDED PARTS INDICATES SAFETY CRITICAL COMPONENTS.
⚠ TO REDUCE RISK OF ELECTRIC SHOCK, LEAKAGE CURRENT APPLIANCE IS RETURNED TO THE CUSTOMER.
(EXPOSED PARTS ARE ACCEPTABLY INSULATED FROM SUPPLY CIRCUIT)

KENWOOD
DPX-7200DAB
JVCKENWOOD Corporation

ISSUED

KRA307E-P	
KRC404-P	
KRA303E-P	
KRC403E-P	
KRC407E-P	
+E2 WIRE_CLAMP	GZW0010-001
+E3 WIRE_CLAMP	GZW0010-001

CONFIDENTIAL

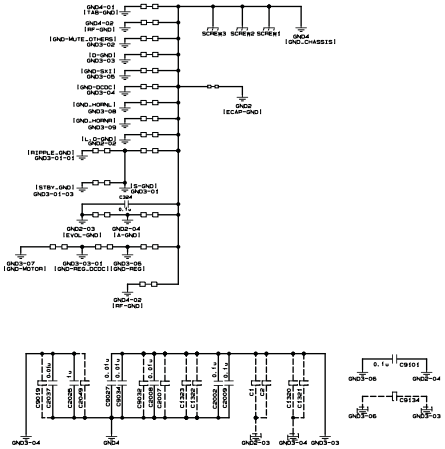

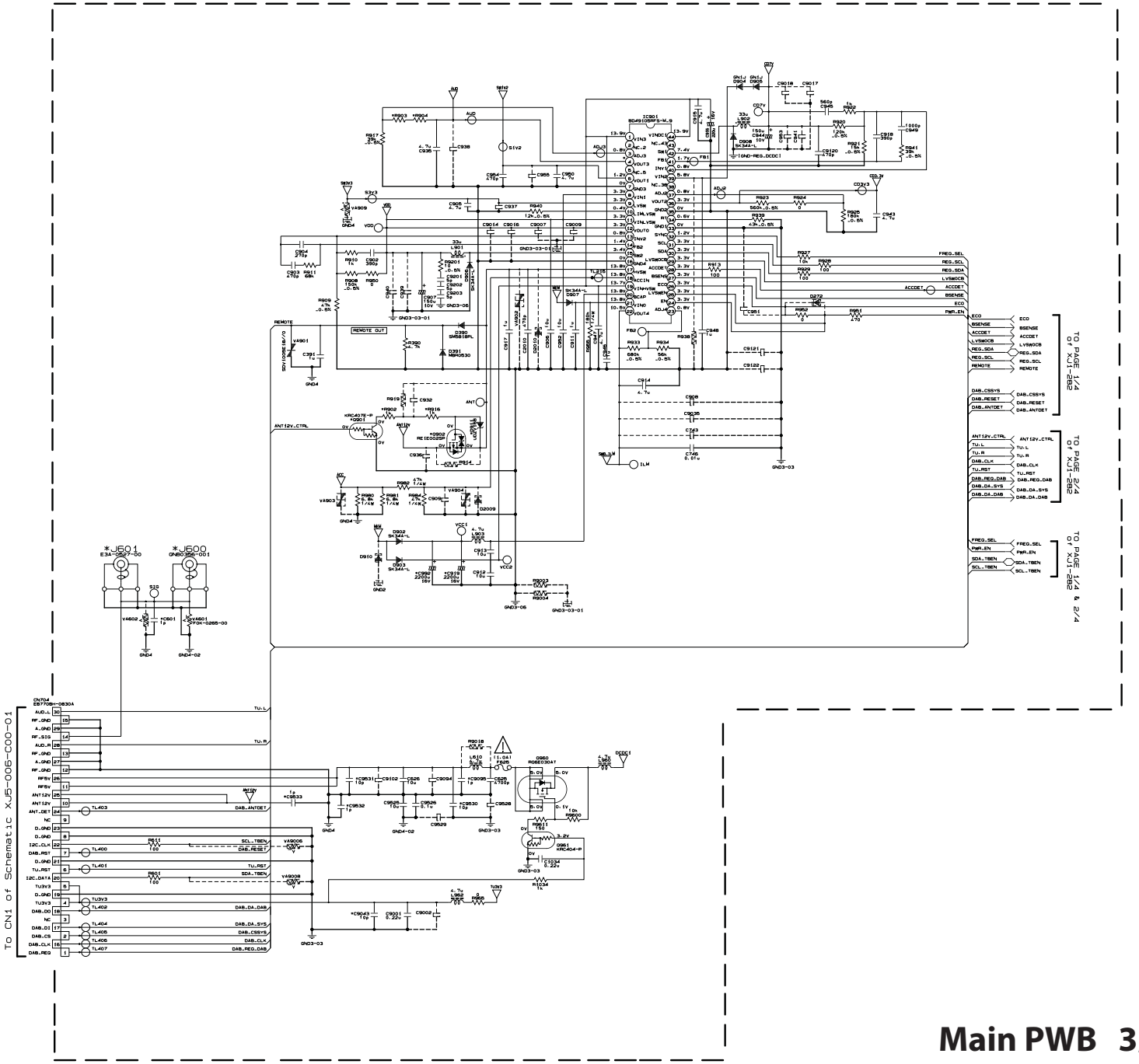

Main PWB 3/4

MODEL NAME : REFER TO MODEL LIST ON SHEET 4/4

CAUTION:
FOR CONTINUED SAFETY REPLACE SAFETY CRITICAL COMPONENTS ONLY WITH MANUFACTURER'S RECOMMENDED PARTS INDICATES SAFETY CRITICAL COMPONENTS.
⚠ TO REDUCE RISK OF ELECTRIC SHOCK, LEAKAGE CURRENT APPLIANCE IS RETURNED TO THE CUSTOMER.
(EXPOSED PARTS ARE ACCEPTABLY INSULATED FROM SUPPLY CIRCUIT)

KENWOOD
DPX-7200DAB
JVCKENWOOD Corporation

SYMBOL	MN NO	SHEET NO	ADDRESS	ISSUED	DATE

ISSUED 2019/07/25

OE REMOTE :

Symbol Number	kJ-282K-00 Plenia Parts Number	kJ-282K-01 Plenia Parts Number	kJ-282E-01 Plenia Parts Number	kJ-282X-01 Plenia Parts Number	kJ-282K-02 Plenia Parts Number	DPX-7200DAB	kJ-282X-02 Plenia Parts Number
!*R802	-	-	RK73B2A473J	RK73B2A473J	-	RK73B2A473J	-
!*R803	RK73H1J225J	RK73H1J225J	-	-	RK73H1J225J	-	RK73H1J225J

SXM :

Symbol Number	kJ-282K-00 Plenia Parts Number	kJ-282K-01 Plenia Parts Number	kJ-282E-01 Plenia Parts Number	kJ-282X-01 Plenia Parts Number	kJ-282K-02 Plenia Parts Number	kJK-143E-02 Plenia Parts Number	kJ-282X-02 Plenia Parts Number
!*C472	CK73JR1E104K	CK73JR1E104K	-	-	CK73JR1E104K	-	-
!*C473	CK73FJR1C106K	CK73FJR1C106K	-	-	CK73FJR1C106K	-	-
!*C474	CK73GR1C225K	CK73GR1C225K	-	-	CK73GR1C225K	-	-
!*C475	CK73GXR1C225K	CK73GXR1C225K	-	-	CK73GXR1C225K	-	-
!*C9003	CK73JRH471K	CK73JRH471K	-	-	CK73JRH471K	-	-
!*D471	RB86.85M	RB86.85M	-	-	RB86.85M	-	-
!*D472	RB86.85M	RB86.85M	-	-	RB86.85M	-	-
!*D473	RB86.85M	RB86.85M	-	-	RB86.85M	-	-
!*D474	RB86.85M	RB86.85M	-	-	RB86.85M	-	-
!*D475	RB86.85M	RB86.85M	-	-	RB86.85M	-	-
!*D476	RB86.85M	RB86.85M	-	-	RB86.85M	-	-
!*IC470	TC7S08FU,LC	TC7S08FU,LC	-	-	TC7S08FU,LC	-	-
!*L470	E50-0029-00	E50-0029-00	-	-	E50-0029-00	-	-
!*L706	LB73G4Y-004	LB73G4Y-004	-	-	LB73G4Y-004	-	-
!*L707	LB73G4Y-004	LB73G4Y-004	-	-	LB73G4Y-004	-	-
!*Q470	KRC402E-P	KRC402E-P	-	-	KRC402E-P	-	-
!*Q471	KRC410E-P	KRC410E-P	-	-	KRC410E-P	-	-
!*R468	RK73B2A100J	RK73B2A100J	-	-	RK73B2A100J	-	-
!*R469	RK73B2A47J	RK73B2A47J	-	-	RK73B2A47J	-	-
!*R470	RK73B2A100J	RK73B2A100J	-	-	RK73B2A100J	-	-
!*R471	RK73H1J101J	RK73H1J101J	-	-	RK73H1J101J	-	-
!*R472	RK73H1J101J	RK73H1J101J	-	-	RK73H1J101J	-	-
!*R473	RK73H1J472J	RK73H1J472J	-	-	RK73H1J472J	-	-
!*R474	RK73F2B221J	RK73F2B221J	-	-	RK73F2B221J	-	-
!*R475	RK73H1J100J	RK73H1J100J	-	-	RK73H1J100J	-	-
!*R476	RK73H1J223J	RK73H1J223J	-	-	RK73H1J223J	-	-
!*R477	RK73H1J104J	RK73H1J104J	-	-	RK73H1J104J	-	-
!*R2007	RK73H1J000J	RK73H1J000J	-	-	RK73H1J000J	-	-

HD & DAB :

Symbol Number	kJ-282K-00 Plenia Parts Number	kJ-282K-01 Plenia Parts Number	kJ-282E-01 Plenia Parts Number	kJ-282X-01 Plenia Parts Number	kJ-282K-02 Plenia Parts Number	DPX-7200DAB	kJ-282X-02 Plenia Parts Number
!*C501	CC73HCH1H01C	CC73HCH1H01C	-	-	CC73HCH1H01C	-	-
!*C9043	CC73JCH1H00D	CC73JCH1H00D	-	-	CC73JCH1H00D	-	-
!*C9095	CC73HCH1H01C	CC73HCH1H01C	-	-	CC73HCH1H01C	-	-
!*C9530	CC73JCH1H00D	CC73JCH1H00D	-	-	CC73JCH1H00D	-	-
!*C9531	CC73JCH1H00D	CC73JCH1H00D	-	-	CC73JCH1H00D	-	-
!*C9532	-	-	CC73HCH1H01C	CC73HCH1H01C	-	CC73HCH1H01C	CC73HCH1H01C
!*C9533	-	-	CC73HCH1H01C	CC73HCH1H01C	-	CC73HCH1H01C	CC73HCH1H01C
!*D911	-	-	UDZV168	UDZV168	-	UDZV168	UDZV168
!*L600	CS770H-0830A	CS770H-0830A	-	-	CS770H-0830A	-	-
!*L601	-	-	E3A-0527-00	E3A-0527-00	-	E3A-0527-00	3A-0527-00
!*Q901	-	-	KRC407E-P	KRC407E-P	-	KRC407E-P	RC407E-P
!*Q902	-	-	RE1C002ZP	RE1C002ZP	-	RE1C002ZP	E1C002ZP
!*R902	-	-	RK73B2A102J	RK73B2A102J	-	RK73B2A102J	K73B2A102J
!*R916	-	-	RK73H1J102J	RK73H1J102J	-	RK73H1J102J	K73H1J102J

REAR USB :

Symbol Number	kJ-282K-00 Plenia Parts Number	kJ-282K-01 Plenia Parts Number	kJ-282E-01 Plenia Parts Number	kJ-282X-01 Plenia Parts Number	kJ-282K-02 Plenia Parts Number	kJK-143E-02 Plenia Parts Number	kJ-282X-02 Plenia Parts Number
!*C161	CE325JV4R7M	CE325JV4R7M	CE325JV4R7M	CE325JV4R7M	CE325EC4R7M	CE325JV4R7M	E325JV4R7M
!*C162	CE325JV4R7M	CE325JV4R7M	CE325JV4R7M	CE325JV4R7M	CE325EC4R7M	CE325JV4R7M	E325JV4R7M
!*C163	CE325JV4R7M	CE325JV4R7M	CE325JV4R7M	CE325JV4R7M	CE325EC4R7M	CE325JV4R7M	E325JV4R7M
!*C164	CE325JV4R7M	CE325JV4R7M	CE325JV4R7M	CE325JV4R7M	CE325EC4R7M	CE325JV4R7M	E325JV4R7M
!*C165	CE325JV4R7M	CE325JV4R7M	CE325JV4R7M	CE325JV4R7M	CE325EC4R7M	CE325JV4R7M	E325JV4R7M
!*C166	CE325JV4R7M	CE325JV4R7M	CE325JV4R7M	CE325JV4R7M	CE325EC4R7M	CE325JV4R7M	E325JV4R7M
!*C500	-	-	-	-	CE32CC1A151M	-	-
!*C501	-	-	-	-	CK73GXR1A106K	-	-
!*C502	-	-	-	-	CK73JXR1C224K	-	-
!*C503	-	-	-	-	CK73HXR1C224K	-	-
!*C504	-	-	-	-	CK73HXR1C224K	-	-
!*C505	-	-	-	-	CK73FXR1C106K	-	-
!*C506	-	-	-	-	CK73FXR1C106K	-	-
!*C507	-	-	-	-	CK73HXR0J224K	-	-
!*C508	-	-	-	-	CK73HXR0J224K	-	-
!*C509	-	-	-	-	CC73JCH1H50J	-	-
!*C510	-	-	-	-	CK73HXR1E104K	-	-
!*C595	-	-	-	-	CK73HXR1A105K	-	-
!*C596	-	-	-	-	CK73GXR1A105K	-	-
!*C597	-	-	-	-	CK73JXR1H471K	-	-
!*C9059	-	-	-	-	CK73JXR1H102K	-	-
!*C9111	-	-	-	-	CK73GXR1A105K	-	-
!*C9511	-	-	-	-	CK73JXR1C473K	-	-
!*C9523	-	-	-	-	CK73JXR1H472K	-	-
!*C9951	-	-	-	-	EA7104P-2605A	-	-
!*D541	-	-	-	-	SN024PL	-	-
!*E3	-	-	-	-	GZN010-001	-	-
!*IC600	-	-	-	-	MP994245J	-	-
!*IC9091	-	-	-	-	TP62522QBV	-	-
!*L500	-	-	-	-	LR76ZQJ100M	-	-
!*L501	-	-	-	-	LK732CA4R7M	-	-
!*L691	-	-	-	-	LL30-0040-00	-	-
!*R501	-	-	-	-	RK73H1J152J	-	-
!*R502	-	-	-	-	RK73H1J512J	-	-
!*R503	-	-	-	-	RK73B2E200J	-	-
!*R504	-	-	-	-	RK73H1J393J	-	-
!*R505	-	-	-	-	RK73B2A000J	-	-
!*R506	-	-	-	-	RK73H1J683D	-	-
!*R507	-	-	-	-	RK73H1J393D	-	-
!*R508	-	-	-	-	RK73H1J183D	-	-
!*R728	-	-	-	-	RK73H1J222J	-	-
!*R780	-	-	-	-	RK73H1J4R7J	-	-
!*R787	-	-	-	-	RK73H1J4R7J	-	-
!*R883	-	-	-	-	RK73H1J103J	-	-
!*R895	-	-	-	-	RK73H1J243J	-	-
!*R897	-	-	-	-	RK73H1J222J	-	-
!*R902	-	-	-	-	RK73H1J101J	-	-
!*R9025	-	-	-	-	RK73H1J272J	-	-
!*V894	-	-	-	-	NAP0024-001X	-	-
!*V895	-	-	-	-	NAP0024-001X	-	-

EMC (E version) :

Symbol Number	kJ-282K-00 Plenia Parts Number	kJ-282K-01 Plenia Parts Number	kJ-282E-01 Plenia Parts Number	kJ-282X-01 Plenia Parts Number	kJ-282K-02 Plenia Parts Number	DPX-7200DAB	kJ-282X-02 Plenia Parts Number
!*C9020	-	-	CK73JXR1A104K	-	-	CK73JXR1A104K	-
!*C9021	-	-	CK73JXR1A104K	-	-	CK73JXR1A104K	-
!*C9023	-	-	CK73GXR1H104K	-	-	CK73GXR1H104K	-
!*C9028	-	-	CK73JXR1A104K	-	-	CK73JXR1A104K	-
!*C9040	-	-	CK73JXR1H222K	-	-	CK73JXR1H222K	-
!*C9041	-	-	-	-	-	CK73JXR1H222K	-
!*C9042	-	-	-	-	-	CK73JXR1H222K	-
!*C9060	-	-	CK73GXR1H104K	-	-	CK73GXR1H104K	-
!*C9061	-	-	CK73JXR1A104K	-	-	CK73JXR1A104K	-
!*C9062	-	-	CK73JXR1H222K	-	-	CK73JXR1H222K	-
!*C9064	-	-	CK73JXR1H222K	-	-	-	-
!*C9067	-	-	CK73JXR1H222K	-	-	CK73JXR1H222K	-

OE LEARNING STEERING REMOTE :

Symbol Number	kJ-282K-00 Plenia Parts Number	kJ-282K-01 Plenia Parts Number	kJ-282E-01 Plenia Parts Number	kJ-282X-01 Plenia Parts Number	kJ-282K-02 Plenia Parts Number	DPX-7200DAB	kJ-282X-02 Plenia Parts Number
!*C780	-	-	-	-	-	-	K73JXR1H102K
!*C781	-	-	-	-	-	-	K73GB51H102K
!*C782	-	-	-	-	-	-	K73JXR1A104K
!*CN702	-	-	-	-	-	-	A710AG-1503A
!*D783	-	-	-	-	-	-	AN202U
!*E2	-	-	-	-	-	-	ZN0010-001
!*G780	-	-	-	-	-	-	E1C002ZP
!*G781	-	-	-	-	-	-	E1C002ZP
!*G782	-	-	-	-	-	-	RC407E-P
!*H775	-	-	-	-	-	-	K73HB1J152J
!*H776	-	-	-	-	-	-	K73HB1J152J
!*H779	-	-	-	-	-	-	K73HB1J470J
!*H781	-	-	-	-	-	-	K73HB1J470J
!*H783	-	-	-	-	-	-	K73HH1J472D
!*H784	-	-	-	-	-	-	K73HH1J472D
!*H785	-	-	-	-	-	-	K73GB2A681J
!*H791	-	-	-	-	-	-	K73GB2A681J
!*H837	-	-	-	-	-	-	K73HB1J561J
!*H838	-	-	-	-	-	-	K73HB1J561J
!*H839	-	-	-	-	-	-	K73HB1J102J
!*H840	-	-	-	-	-	-	K73HB1J102J
!*H841	-	-	-	-	-	-	K73HB1J104J
!*H842	-	-	-	-	-	-	K73HB1J104J
!*H843	-	-	-	-	-	-	K73HB1J222J
!*V780	-	-	-	-	-	-	TK-0282-00
!*V781	-	-	-	-	-	-	TK-0282-00

PREOUT PAIR :

Symbol Number	kJ-282K-00 Plenia Parts Number	kJ-282K-01 Plenia Parts Number	kJ-282E-01 Plenia Parts Number	kJ-282X-01 Plenia Parts Number	kJ-282K-02 Plenia Parts Number	DPX-7200DAB	kJ-282X-02 Plenia Parts Number
!*C262	-	-	CK73ERR1C475K	CK73ERR1C475K	-	-	-
!*C342	CK73ERR1C475K	CK73ERR1C475K	-	-	CK73ERR1C475K	CK73ERR1C475K	K73ERR1C475K
!*C352	CK73ERR1C475K	CK73ERR1C475K	-	-	CK73ERR1C475K	CK73ERR1C475K	K73ERR1C475K
!*J321	E6D-0016-00	E6D-0016-00	E6D-0016-00	E6D-0016-00	E6D-0016-00	E6D-0016-00	E6D-0016-00
!*R253	RK73H1J000J	RK73H1J000J	-	-	RK73H1J000J	RK73H1J000J	K73H1J000J
!*R260	-	-	-	-	-	-	-
!*R261	-	-	RK73H1J223J	RK73H1J223J	-	-	-
!*R262	-	-	RK73H1J331J	RK73H1J331J	-	-	-
!*R263	-	-	RK73H1J472J	RK73H1J472J	-	-	-
!*R340	RK73H1J181J	RK73H1J181J	-	-	RK73H1J181J	RK73H1J181J	K73H1J181J
!*R341	RK73H1J223J	RK73H1J223J	-	-	RK73H1J223J	RK73H1J223J	K73H1J223J
!*R342	RK73H1J472J	RK73H1J472J	-	-	RK73H1J472J	RK73H1J472J	K73H1J472J
!*R343	RK73H1J331J	RK73H1J331J	-	-	RK73H1J331J	RK73H1J331J	K73H1J331J
!*R350	RK73H1J181J	RK73H1J181J	-	-	RK73H1J181J	RK73H1J181J	K73H1J181J
!*R351	RK73H1J223J	RK73H1J223J	-	-	RK73H1J223J	RK73H1J223J	K73H1J223J
!*R352	RK73H1J472J	RK73H1J472J	-	-	RK73H1J472J	RK73H1J472J	K73H1J472J
!*R353	RK73H1J331J	RK73H1J331J	-	-	RK73H1J331J	RK73H1J331J	K73H1J331J

PREOUT LEVEL :

Symbol Number	kJ-282K-00 Plenia Parts Number	kJ-282K-01 Plenia Parts Number	kJ-282E-01 Plenia Parts Number	kJ-282X-01 Plenia Parts Number	kJ-282K-02 Plenia Parts Number	DPX-7200DAB	kJ-282X-02 Plenia Parts Number
!*C171	CE320M1E470M	CE320M1E470M	-	-	CE320M1E470M	-	E32CL1E330M
!*C181	CK73FXR1C105K	CK73FXR1C105K	-	-	CK73FXR1C105K	-	-
!*C183	CK73GXR1C105K	CK73GXR1C105K	-	-	CK73GXR1C105K	-	-
!*C187	CK73HXR1C105K	CK73HXR1C105K	-	-	CK73HXR1C105K	-	-
!*C188	CK73GXR1E105K	CK73GXR1E105K	-	-	CK73GXR1E105K	-	-
!*C189	-	-	-	-	-	-	K73HXR1H104K
!*C190	-	-	-	-	-	-	K73JXR1H103K
!*C191	-	-	-	-	-	-	C73JCH1H01J
!*C192	-	-	-	-	-	-	K73GXR1A105K
!*IC164	-	-	-	-	-	-	LM1110DF1
!*IC165	NJM4190R-A	NJM4190R-A	-	-	NJM4190R-A	-	-
!*L165	LR73Z0AD100M	LR73Z0AD100M	-	-	LR73Z0AD100M	-	-
!*R160	-	-	-	-	-	-	K73HB1J000J
!*R161	RK73H1J000J	RK73H1J000J	-	-	RK73H1J000J	-	K73HB1J000J
!*R176	RK73B2A000J	RK73B2A000J	-	-	RK73B2A000J	-	-
!*R177	RK73H1J562J	RK73H1J562J	-	-	RK73H1J562J	-	-
!*R178	RK73H1J752J	RK73H1J752J	-	-	RK73H1J752J	-	-
!*R179	RK73H1J102D	RK73H1J102D	-	-	RK73H1J102D	-	-
!*R180	RK73H1J183D	RK73H1J183D	-	-	RK73H1J183D	-	-
!*R181	RK73H1J103J	RK73H1J103J	-	-	RK73H1J103J	-	-
!*R182	-	-	-	-	-	-	K73HH1J752D
!*R183	-	-	-	-	-	-	K73HH1J182D
!*R188	-	-	RK73B2A000J	RK73B2A000J	-	RK73B2A000J	K73B2A000J
!*R903	RK73HH1J334D	RK73HH1J334D	RK73HH1J394D	RK73HH1J394D	RK73HH1J334D	RK73HH1J394D	K73HH1J474D
!*R904	RK73HH1J473D	RK73HH1J473D	RK73HH1J103D	RK73HH1J103D	RK73HH1J473D	RK73HH1J103D	K73HH1J683D
!IC801 Pd VOUT3 = AUD	8.5V	8.5V	9.0V	9.0V	8.5V	9.0V	11.5V
!IC161 P25 VCL	8.5V	8.5V	9.0V	9.0V	8.5V	9.0V	8.5V
!IC161 P21 VCC	16.65V	16.65V	9.0V	9.0V	16.65V	9.0V	11.5V
!IC161 P19 SEL	4.0V	4.0V	4.0V	4.0V	4.0V	4.0V	0V
!IC161 P20 HSYLS	0V	0V	4.8V	4.8V	0V	4.8V	0V
!IC161 P36-40 OUT+	8.39V	8.39V	4.38V	4.38V	8.39V	4.38V	8.6V
!IC165 P8 5V17V	16.65V	16.65V	0V	0V	16.65V	0V	0V

STAGE SETTING :

Symbol Number	kJ-282K-00 Plenia Parts Number	kJ-282K-01 Plenia Parts Number	kJ-282E-01 Plenia Parts Number	kJ-282X-01 Plenia Parts Number	kJ-282K-02 Plenia Parts Number	DPX-7200DAB	kJ-282X-02 Plenia Parts Number
!*R768	-	-	-	RK73H1J393J	RK73H1J333J	RK73H1J393J	K73H1J333J
!*R769	RK73H1J473J	RK73H1J473J	RK73H1J822J	RK73H1J153J	RK73H1J473J	RK73H1J822J	K73H1J153J
!*R770	-	RK73H1J393J	-	-	-	-	-
!*R771	RK73H1J473J	RK73H1J822J	RK73H1J473J	RK73H1J473J	RK73H1J473J	RK73H1J473J	K73H1J473J
!IC701 PIN 016	0V	0V	0.57V	1.03V	0V	0.57V	1.03V
!IC701 PIN 017	0V	0.57V	0V	0V	0V	0V	0V

FRONT PANEL 1DIN & 2DIN :

Symbol Number	kJ-282K-00 Plenia Parts Number	kJ-282K-01 Plenia Parts Number	kJ-282E-01 Plenia Parts Number	kJ-282X-01 Plenia Parts Number	kJ-282K-02 Plenia Parts Number	DPX-7200DAB	kJ-282X-02 Plenia Parts Number
!*C919	CD040CZ1C222M	CD040CZ1C222M	CD040CZ1C222M	CD040CZ1C222M	-	-	-
!*C990	CD040CZ1C222M	CD040CZ1C222M	CD040CZ1C222M	CD040CZ1C222M	-	-	-
!*C992	-	-	-	-	CD24EU1C222M1	CD24EU1C222M1	CD24EU1C222M1
!*C994	-	-	-	-	CD24EU1C222M1	CD24EU1C222M1	CD24EU1C222M1
!*C9033	CK73JXR1H102K	CK73JXR1H102K	CK73JXR1H102K	CK73JXR1H102K	-	-	-
!*CN701	E6J-0216-00	E6J-0216-00	E6J-0216-00	E6J-0216-00	-	-	-
!*CN703	-	-	-	-	E8780AA-1020C	E8780AA-1020C	E8780AA-1020C
!*F713	RK73H1J101J	RK73H1J101J	RK73H1J101J	RK73H1J101J	-	-	-
!*F714	RK73H1J274J	RK73H1J274J	RK73H1J274J	RK73H1J274J	-	-	-
!*R830	RK73H1J101J	RK73H1J101J	RK73H1J101J	RK73H1J101J	-	-	-
!*R832	-	-	-	-	RK73H1J101J	RK73H1J101J	K73H1J101J
!*R848	RK73H1J000J	RK73H1J000J	RK73H1J000J	RK73H1J000J	-	-	-
!*R850	RK73H1J153J	RK73H1J153J	RK73H1J153J	RK73H1J153J	-	-	-
!*R861	-	-	RK73H1J153J	RK73H1J153J	RK73H1J153J	RK73H1J153J	K73H1J153J
!*R9005	RK73H1J000J	RK73H1J000J	RK73H1J000J	RK73H1J000J	-	-	-
!*R9006	-	-	-	-	RK73H1J000J	RK73H1J000J	K73H1J000J
!*S830	STA-0031-00	STA-0031-00	STA-0031-00	STA-0031-00	-	-	-
!*V3715	-	-	-	-	TK-0282-00	TK-0282-00	TK-0282-00

MODEL LIST AND POWER CORD :

MODEL NAME	MODEL NO.	UNIT NO.	POWER CORD
KDC-X704	YJ1-174K-00	KJ1-282K-00	E3A-0324-00
KDC-BT778HD	YJ1-174K-01	KJ1-282K-01	E3A-0324-00
KDC-BT740DAB	YJ1-174K-01	KJ1-282E-01	E3A-0320-00
KDC-BT740DAB	YJ1-174X-01	KJ1-282X-01	E3A-0324-00
DPX-7948H	YJ5-233K-00	KJ1-282K-02	E3A-0324-00
DPX-7200DAB	YJ5-233E-01	KJ1-282E-02	E3A-0455-00
DPX-7200DAB	YJ5-233X-01	KJ1-282X-02	E3A-0455-00

Main PWB 4/4

MODEL NAME : REFER TO MODEL LIST.

CAUTION:
FOR CONTINUED SAFETY REPLACE SAFETY CRITICAL COMPONENTS ONLY WITH MANUFACTURER'S RECOMMENDED PARTS INDICATES SAFETY CRITICAL COMPONENTS.
⚠ TO REDUCE RISK OF ELECTRIC SHOCK, LEAKAGE CURRENT APPLIANCE IS RETURNED TO THE CUSTOMER.
(EXPOSED PARTS ARE ACCEPTABLY INSULATED FROM SUPPLY CIRCUIT)

KENWOOD
DPX-7200DAB
JVC KENWOOD Corporation